NTN®
AUTOMATION

Linear Ball Bushings and Shafting

NLM — P16
NKB — P18
NSW — P20

NLM···AJ — P16
NKB···AJ — P18
NSW···AJ — P20

NLM···OP — P16
NKB···OP — P18
NSW···OP — P20

NLM···L — P22
NKB···L — P23
NSW···L — P24

KH — P25

NLMF — P29
NKBF — P33
NSWF — P34

NLMK — P29
NKBK — P33
NSWK — P34

NLMT — P31

NLMFP — P30

NLMKP — P30

NLMTP — P32

NLMF···L — P35
NKBF···L — P41
NSWF···L — P43

NLMK···L — P35
NKBK···L — P41
NSWK···L — P43

NLMT···L — P38

NLMFP···L — P36

NLMKP···L — P36

NLMFC···L — P37
NKBFC···L — P42
NSWFC···L — P44

NLMKC···L — P37
NKBKC···L — P42
NSWKC···L — P44

NLMTP···L — P39

NLMTC···L — P40

NSMA — P45
NKBA — P48

NSMA···AJ — P45
NKBA···AJ — P48

NKBSB — P54

NKBSB···AJ — P54

NKBB — P52

NKBB···AJ — P52

NKBB···OP — P53

NSMA···S — P46
NKBA···S — P46

NSMA···L — P47
NKBA···L — P47

NSME — P50
NKBE — P50

NTBR — P49

NSME···L — P51

NSSWA — P55

NSSWA···L — P56

NSWB — P57

NSWB···L — P58

NSWB···OP — P59

NSWB···L-OP — P60

NSSWD — P61

NSSWD···L — P62

NSK — P63
NPA — P64
NSKW — P65

NSHF — P66

L — P67
SSL — P68
CPL — P68
M — P68
PDL — P69

NSP — P70

NSBR — P71
NSTBR — P72
NSRA — P73

NSLM — P26
NSKB — P27
NSSW — P28

NSLM···OP — P26
NSKB···OP — P27
NSSW···OP — P28

Type	Operating conditions	Type	Operating conditions
1	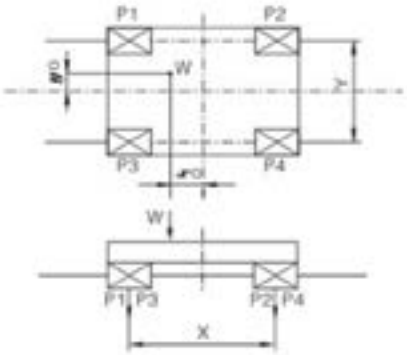 $P1=\frac{1}{4}W+\frac{x0}{2X}W+\frac{y0}{2Y}W$ $P2=\frac{1}{4}W-\frac{x0}{2X}W+\frac{y0}{2Y}W$ $P3=\frac{1}{4}W+\frac{x0}{2X}W-\frac{y0}{2Y}W$ $P4=\frac{1}{4}W-\frac{x0}{2X}W-\frac{y0}{2Y}W$	3	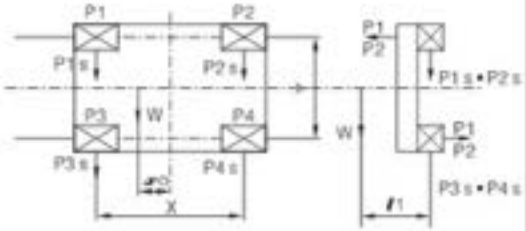 $P1=P2=P3=P4=\frac{\ell 1}{2X}W$ $P1s=P3s=\frac{1}{4}W+\frac{M0}{2X}W$ $P2s=P4s=\frac{1}{4}W-\frac{M0}{2X}W$
2	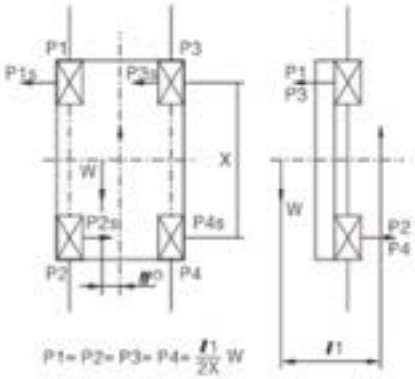 $P1=P2=P3=P4=\frac{\ell 1}{2X}W$ $P1s=P2s=P3s=P4s=\frac{M0}{2X}W$	4	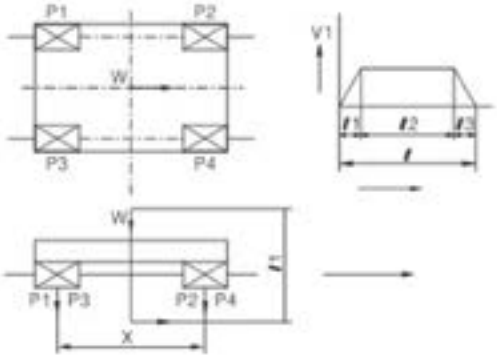 $P1=P3=\frac{1}{4}W\left(1+\frac{2V1\cdot\ell 1}{g\cdot\ell 1\,X}\right)$ $P2=P4=\frac{1}{4}W\left(1-\frac{2V1\cdot\ell 1}{g\cdot\ell 1\,X}\right)$ $P1=P3=\frac{1}{4}W\left(1-\frac{2V1\cdot\ell 1}{g\cdot\ell 3\,X}\right)$ $P2=P4=\frac{1}{4}W\left(1+\frac{2V1\cdot\ell 1}{g\cdot\ell 3\cdot X}\right)$ $P1=P2=P3=P4=\frac{1}{4}W$ g=9.8x10³mm/sec2

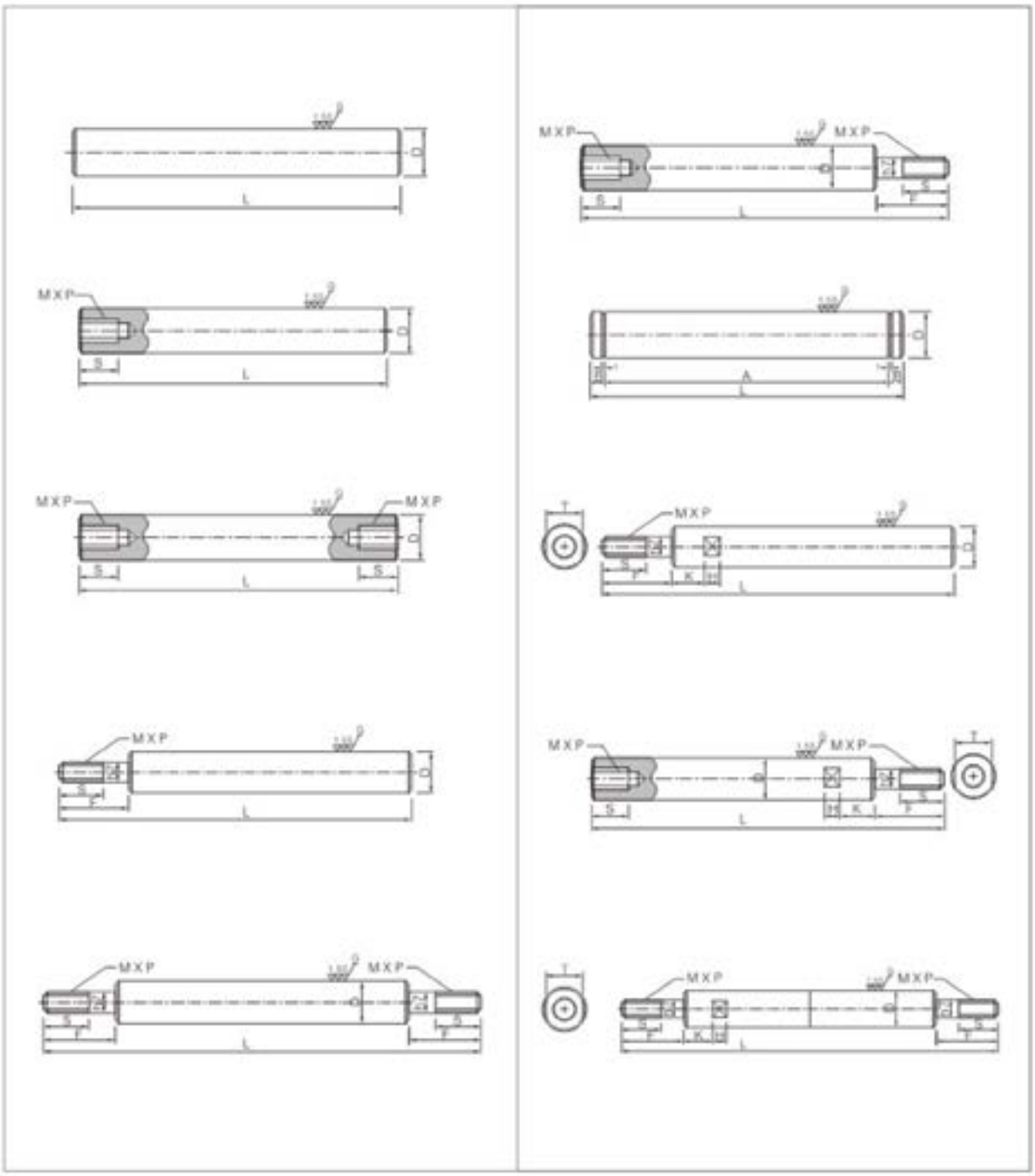
MXP
D
L
S
T
K

Load Rating

Basic Dynamic Load Rating (c)
This term is arrived at based on an evaluation of a number of identical linear systems individually run in the same conditions, if 90% of them can run with the load(with a constant value in a constant direction)for a distance of 50 km without damage caused by rolling fatigue. This is the basis of the rating.

Allowable Static Moment (M)
This term defines the allowable limit value of static moment load, with reference to the amount of permanent deformation similar to that used for evaluation of basic rated load(Co).

Static Safety Factor (fs)
This factor is used based on the application condition as shown in Table 1.

Basic Static Load Rating (Co)
This term defines a static load such that, at the contacting position where the maximum stress is exercised, the sum of the permanent deformation of the rolling elements and that of the rolling plane is 0.0001 time of the diameter of the rolling elements.

Table 1. Static Safety Factors

Condition of use	Low limit of fs
When the shaft has less deflection and shock	1 to 2
When elastic deformation should be considered with respect to pinch load	2 to 4
When the equipment is subject to vibration and impacts	3 to 5

Rating Life

Rating Life of the Linear System
As long as the linear system reciprocates while being loaded, continuous stress acts on the linear system to cause flaking on the rolling bodies and planes because of material fatigue.
The travelling distance of linear system until the fist flaking occurs is called the life of the system. The life of the system varies even for the system of the same dimenstions, structure, material, heat treatment and processing method, when used in the same conditions. This variation is brought about from the essential variations in the material fatigue itself, the rating life defined bellow is used as an index for the life expectancy of the linear system.

Rating Life (L)
Rating life is the total travelling distance that 90% of a group of systems of the same size can reach without causing any flaking when they operate under the same conditions.

The rating life can be obtained from the following equation with the basic dynamic load rating and the load on the linear system:

For ball type: $$L=\left(\frac{C}{P}\right)^3 \cdot 50 \qquad (1)$$

L: Rating life (km) C: Basic dynamic load rating (N)
P: Load (N)

Consideration and influence of vibration impact loads and distribution of load should be taken into account when designing a linear motion system. It is difficult to calculate the actual load. The rating life is also affected by the operating temperature. In these conditions, the expression(1) is arranged as follows:

For ball type: $$L=\left(\frac{f_H \cdot f_T \cdot f_C}{f_W}\frac{C}{P}\right)^3 \cdot 50$$

L: Rating lift (km) fh: Hardness factor (See Fig.1)
C: Basic dynamic load rating (N)
fT: Temperature coefficient (See Fig.2) P: Load (N)
fc: Contact coefficient (See Table 2)
fw: Load coefficient (See Table 3)

The rating life in hours can be calculated by obtaining the travelling distance per unit time. The rating life in hours can be obtained from the following expression when the stroke length and the number of strokes are constant:

$$L_h=\frac{L \cdot 10^3}{2\ell_s \cdot n_1 \cdot 60}$$

Lh: Rating life in hours (hr)
ℓ_s: Stroke length (m)
L: Rating life (km)
n1: No.of strokes per minute (cpm)

Hardness Factor (fH)

The shaft must be sufficiently hardened when a linear bushing is used. If not properly hardened, permissible load is lowered and the life of the bushing will be shortened.

Fig. 1 Hardness Factor

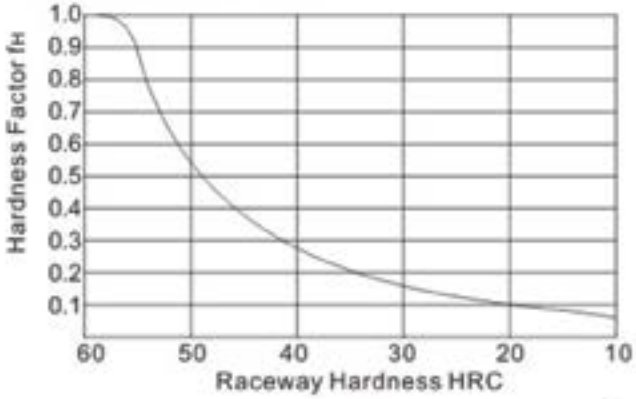

Temperature Coefficient (fT)

If the temperature of the linear system exceeds 100℃, hardness of the linear system and the shaft lowers to decrease the permissible load compared to that of the linear system used at room temperature. As a result, the abnormal temperature rise shortens the rating life.

Fig. 2 Temperature Coefficient

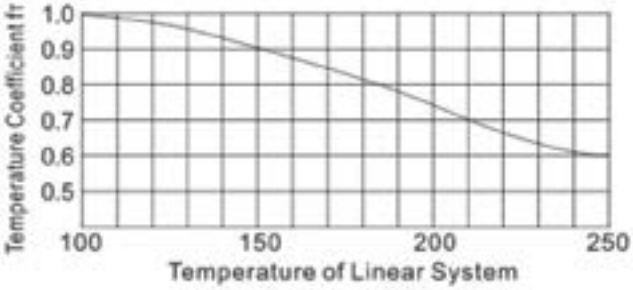

Contact Coefficient (fc)

Generally tow or more linear bushing are used on one shaft. Thus, the load on each linear system differs depending on each processing accuracy. Because the linear bushings are not loaded equally, the number of linear bushing per shaft changes the permissible load of the system.

Table 2 Contact Coefficient

Number of linear systemsper shaft	Contact coefficient fc
1	1.00
2	0.81
3	0.72
4	0.66
5	0.61

Load Coefficient (fw)

When calculating the load on the linear system, it is necessary to accurately obtain object weight, inertial force based on motion speed, moment load, and each transition as time passes. However, it is difficult to calculate those values accurately because reciprocating motion involves the repetition of start and stop as well as vibration and impact. A more practical approach is to obtain the load coefficient by taking the actual operating conditions into account.

Table 3 Load Coefficient

Operating Conditions	Fw
Operation at low speed (15m/min.or less) without impulsive shock from outside	1.0 to 1.5
Operation at intermediate speed (60m/min.or less) without impulsive shock	1.5 to 2.0
Operation at high speed (over 60m/min.) With impulsive shock from outside	2.0 to 3.5

Frictional Resistance

The static frictional resistance of the NTN linear system is so low as to be only slightly different from the kinetic frictional resistance, enabling smooth linear movement from low to high speeds. In general, the frictional resistance is expressed by the following equation.

$$F = \mu \cdot W + f$$

F: Frictional resistance
W: Load weight
μ : Coefficient of friction
f: Sealing resistance

The frictional resistance of each NTN linear system depends on the model, load weight, speed, and lubricant. The sealing resistance depends on the lip interference and lubricant,

The frictional resistance of each NTN linear system depends on the model, load weight, speed, and lubricant. The sealing resistance depends on the lip interference and lubricant, regardless of the load weight. The sealing resistance of one linear system is about 200 to 500 gf. The coefficient of friction depends on the load weight moment load, and preload. Table 6 shows the coefficient of kinetic friction od each type of linear system which has been installed and lubricated properly and applied with normal load (p/c=0.2)

Table 5 Coefficient of Linear System Friction (μ)

Linear System Type	Models	Coefficient of Friction (μ)
Linear Bushing	LM KB SW	0.002 to 0.003

Ambient Working Temperature

The ambient working temperature range for each NTN linear system depends on the model. Consult NTN on use outside the recommended temperature range.

Temperature conversion equation

$$C = \frac{5}{9}(F-32)$$

$$F = 32 + \frac{5}{9}C$$

Table 6 Ambient Working Temperature

Linear System Type	Models	Ambient Working Temperature
Linear Bushing	LM KB SW	−20 to 80 ℃
Linear Bushing	LM(m) KB(m) SW(m)	−20 to 120 ℃

Lubrication and Dust Prevention

Using NTN linear system without lubrication increases the abrasion of the rolling elements, shortening the life span. The NTN linear systems therefore require appropriate lubrication. For lubrication NTN recommends turbine oil conforming to ISO Standards G32 to G68 or lithium base soap grease NO.2. Some NTN linear systems are sealed to block dust out and seal lubricant in . If used in a harsh or corrosive environment, however, apply a protective cover to the part involving linear motion.

Tolerance

Note that precision of inscribed circle diameters and outside diameters for the clearance adjustable type (...-AJ)and the open type (...-OP)indicates the value obtained before the corresponding type is subjected to cutting process.

Load Rating and life Expectancy

The lift (L)of a linear bushing can be obtained from the following equation with the basic dynamic load rating and the load applied to the bush:

$$L=\left(\frac{f_H \cdot f_T \cdot f_C}{f_W} \cdot \frac{C}{P}\right)^3 \cdot 50 \qquad (1)$$

L: Rated life(km)
C: Basic dynamic load rating(N)
P: Working load(N)
f_W: Load coefficient
f_H: Hardness factor(See page5)
f_T: Temperature coefficient(See page5)
f_C: Contact coefficient(See page5)

The lifespan (Ln)of a linear bushing in hours can be obtained by calculating the traveling distance per unit time.
The lifespan can be obtained from the following equation if the stroke length and the number of strokes are constant:

$$L_h=\left(\frac{L \cdot 10^3}{2 \cdot s \cdot n_1 \cdot 60}\right) \qquad (2)$$

L_h: Lifespan(hr)
L: Rated life(km)
S: Stroke length(m)
n_1: Number of strokes per minute(cpm)

Relation between ball Circuits and load rating

The NTN linear bushing includes ball circuits that are spaced equally and circumferentially. The load rating varies according to the loaded position on the circumference.

The value the dimension table indicates the load rating when the load is placed on top of one ball circuit. If the NTN linear bushing is used while two ball circuits loaded uniformly, the load rating will be greater. The following table shows the values by the number of ball circuits in such cases.

Table1

Row position load ratio \ Number of rows	3	4	5	6	8
Row position	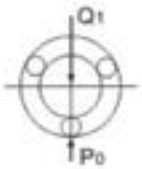 $Q_1=P_0$	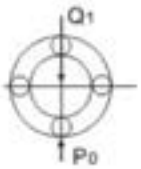 $Q_1=P_0$	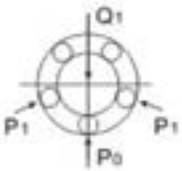 $Q_1=1.106P_0$	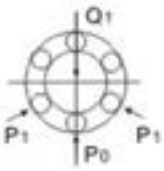 $Q_1=1.354P_0$	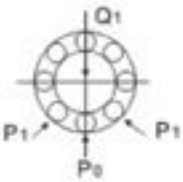 $Q_1=1.841P_0$
Row position	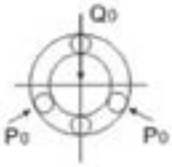 $Q_0=P_0$	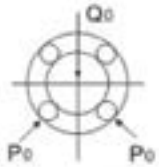 $Q_0=1.414P_0$	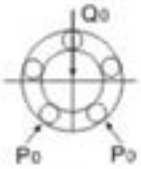 $Q_0=1.618P_0$	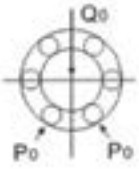 $Q_0=1.732P_0$	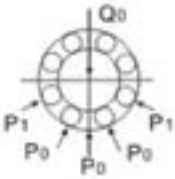 $Q_0=2.052P_0$
load ratio	$Q_0/Q_1=1$	$Q_0/Q_1=1.414$	$Q_0/Q_1=1.463$	$Q_0/Q_1=1.280$	$Q_0/Q_1=1.115$

Sample Calculations

1.Obtaining the rated life L and lifespan Lh of the NTN linear bushing used in following conditions:

Linear bushing :	LM 20
Stroke length:	50mm
Number of strokes per minute:	50cpm
Load per bush:	490N

The basic dynamic load rating of the linear bushing is 882N from the dimension table. From equation (1), therefore, the rated life L is obtained as follows:

$$L=\left(\frac{f_H \cdot f_T \cdot f_C}{f_W} \cdot \frac{C}{P}\right)^3 \cdot 50 \quad F_H=F_T=F_C=F_W=1.0$$

$$=\left(\frac{882}{490}\right)^3 \times 50 = 292\text{km}$$

From equation (2), the lifespan Lh is obtained as follows:

$$L_h=\frac{L\times 10^3}{2\times e_s\times n_l\times 60}=\frac{292\times 10^3}{2\times 0.05\times 50\times 60}=973\text{hr}$$

2.Selecting the linear bushing type satisfying the following conditions:

Number of linear bushing used:	4
Stroke length:	1m
Traveling speed:	10m/min
Number of strokes per minute:	5cpm
Lifespan:	10,000hr
Total load:	980N

From equation (2), the travelling distance within the lifespan is obtained as follows:

$$L=2\times \ell_s \times n_l \times 60 \times L_h=6{,}000\text{km}$$

From equation (2),the basic dynamic load rating is obtained as follows:

$$C=\sqrt[3]{\frac{882}{490}} \cdot \left(\frac{f_W}{f_H \cdot f_T \cdot f_C}\right) \cdot P=1492\text{N}$$

Assume the following with a pair of shafts each with two linear bushing:
Fc=0.81, fw=ft=fH=1
As a result, LM30 is selected from the dimension table as the NTN linear bushing type satisfying the value of C

Clearance and Fit

When a standard-type NTN linear bushing is used with a shaft, inadequate clearance, adjustment may cause early bush failure and/or poor, rough travelling. The clearance adjusted when assembled in the housing which can control the outside cylinder diameter. However, too much clearance adjustment increases the deformation of the outside cylinder, to affect its precision and life. Therefore, the appropriate clearance between the bush and shaft, and clearance between the bush and housing are required according to the application. Table 2 shows recommended fit of the bush:

Model \ Division		Shaft		Housing	
		Normal fit	Transitional	Loose fit	Tight fit
LM SM	High class	g6	h6	H7	J7
KB	High class	h6	j6	H7	J7

Note: The clearance may be zero or negative. Please attention the movement

Shaft and Housing

To optimize performance of the NTN linear bushing high precision of he shaft and housing is required.

1.Shaft

The rolling balls in the NTN linear bushing are in point contact with the shaft surface. Therefore, the shaft dimensions, tolerance, surface finish, and hardness greatly affect the travelling performance of the bush. The shaft should be manufactured with due attention to the following points:

1) Since the surface finish critically affects smooth rolling of balls; grind the shaft at 1.5S or better

2) The nest hardness of the shaft is HRC 60 to 64. Hardness less than HRC 60 decreases the life considerably, and hence reduces the permissible load. On the other hand, hardness over HRC 64 accelerates ball wear.

3) The shaft diameter for the clearance adjustable linear bush and open linear bush should as much as possible be of the lower value of the inscribed circle diameter in the specification table. Do not set the shaft diameter to the upper value.

4) Zero clearance or negative clearance increases the frictional resistance slightly. If the negative clearance is too tight, the deformation of the outside cylinder will become larger, to shorten the bush life.

2.Housing

There is a wide range of housing differing in design, machining and mounting. For the fitness and shapes of housings, see Table 2 and the following section on mounting.

Mounting

When inserting the linear bush into the housing, do not hit the linear bush on the side ring holding the retainer but apply the cylinder circumference with a proper jig and push the linear bush into the housing by hand or lightly knock it in.(See Fig .1)

In inserting the shaft after mounting the bush, be careful not to shock the balls. Note that if two shafts are used in parallel, the parallelism is the most important factor to assure the smooth linear movement. Take care setting the shafts.

Fig.1

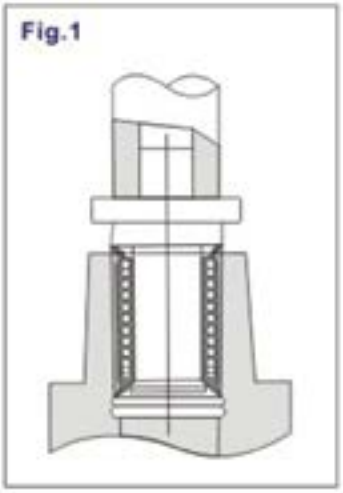

Examples of Mounting

The popular way to mount a linear bush is to operate it with an appropriate interference. It is recommended, however, to make a loose fit in principle because otherwise precision is apt to be minimized. The following examples (Figs.2 to 6) show assembling of the inserted bush in terms of designing and mounting, for reference.

Fig.2

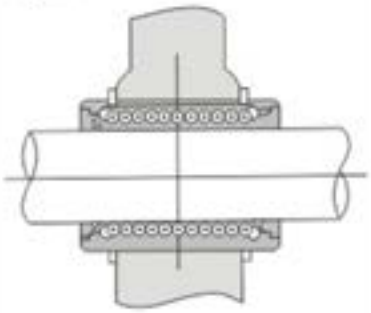

Fig.3

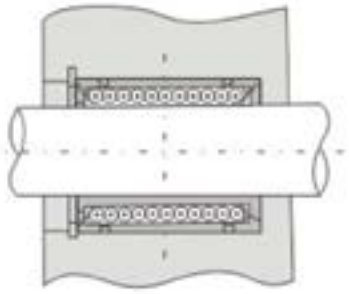

Fig.4

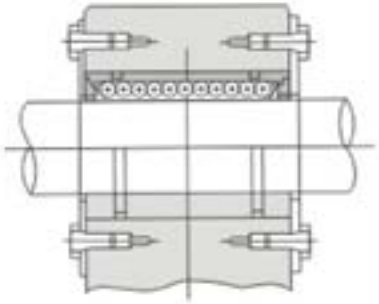

Fig.5

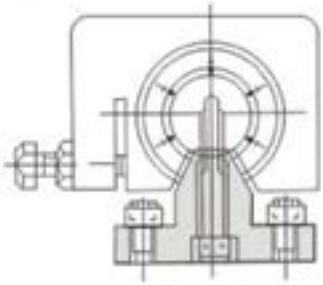

Fig.6

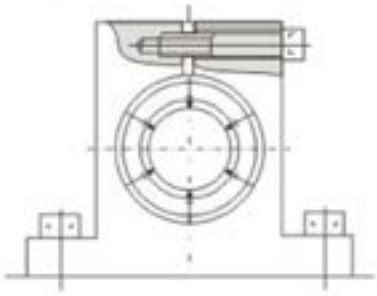

Since 1918, NTN has been a trusted OE manufacturer of high-performance bearing products that increase productivity and efficiency.

- NTN has been the world's broad-line bearing manufacturer for nearly 100 years.
- NTN has the largest bearing manufacturing footprint in the United States.
- NTN is the largest supplier of American-made products to the construction and mining industries.
- NTN is a major supplier to over two-thirds of the world's "Fortune 500" manufacturing companies.
- More cars worldwide ride on NTN bearings and drivetrains than any other manufacturer's product.

NLM Linear bearing
Asia series

NLM
STANDARD TYPE

NLM...AJ
ADJUSTMENT TYPE

NLM...OP
OPEN TYPE

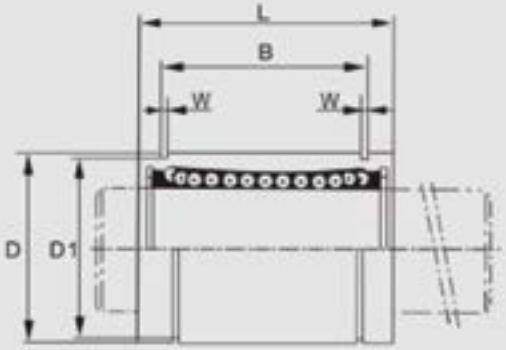

MODEL NO.	NUMBER OF BALL ROWS	MODEL NO.	NUMBER OF BALL ROWS	MODEL NO.	NUMBER OF BALL ROWS	MAIN DIMENSIONS					
						INSCRIBED CIRCLE DIAMETER		OUTER DIAMETER		LENGTH	
						dr	TOLERANCE	D	TOLERANCE	L	TOLERANCE
NLM3	4					3	0 -0.008	7	0 -0.009	10	0 -0.12
NLM4	4					4		8		12	
NLM5	4					5		10		15	
NLM6	4	NLM6AJ	4			6	0 -0.009	12	0 -0.011	19	0 -0.20
NLM8S	4	NLM8SAJ	4			8		15		17	
NLM8	4	NLM8AJ	4			8		15		24	
NLM10	4	NLM10AJ	4	NLM10OP	3	10		19	0 -0.013	29	
NLM12	4	NLM12AJ	4	NLM12OP	3	12		21		30	
NLM13	4	NLM13AJ	4	NLM13OP	3	13		23		32	
NLM16	5	NLM16AJ	5	NLM16OP	4	16		28		37	
NLM20	5	NLM20AJ	5	NLM20OP	4	20	0 -0.010	32	0 -0.016	42	
NLM25	6	NLM25AJ	6	NLM25OP	5	25		40		59	0 -0.30
NLM30	6	NLM30AJ	6	NLM30OP	5	30		45		64	
NLM35	6	NLM35AJ	6	NLM35OP	5	35	0 -0.012	52	0 -0.019	70	
NLM40	6	NLM40AJ	6	NLM40OP	5	40		60		80	
NLM50	6	NLM50AJ	6	NLM50OP	5	50		80		100	
NLM60	6	NLM60AJ	6	NLM60OP	5	60	0 -0.015	90	0 -0.022	110	

Annotate: POM retainer, Steel retainer, stainless steel type, oilless series is the same.

NLM
STANDARD TYPE

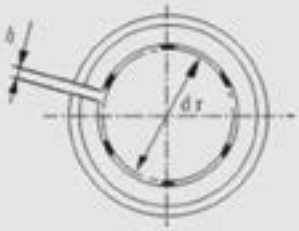

NLM...AJ
ADJUSTMENT TYPE

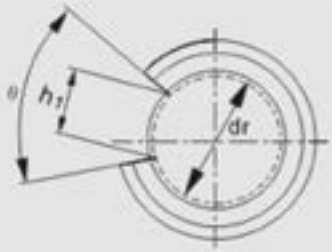

NLM...OP
OPEN TYPE

MAIN DIMENSIONS							ECCEN-TIRICITY (MAX.)	BASIC LOAD RATING		WEIGHT (g)		
OUTER LOCKING GROOVE			W	h	h1	θ		DYNAMIC C(kgf)	STATIC Co(kgf)			
B	TOLERANCE	D1										
								7	11			
							0.008	9	13	3		
10.2		9.6	1.1					17	21	4		
13.5		11.5	1.1	1				21	27	6	6	
11.5		14.3	1.1	1				18	23	9		
17.5		14.3	1.1	1				27	41	14	14	
22	0 -0.20	18	1.3	1	6.8	80°	0.012	38	56	28	27	
23		20	1.3	1.5	8	80°		42	61	32	31	24
23		22	1.3	1.5	9	80°		52	79	38	39	32
26.5		27	1.6	1.5	11	80°		79	120	74	73	58
30.5		30.5	1.6	1.5	11	60°		88	140	80	80	72
41		38	1.85	2	12	50°	0.015	100	160	206	205	177
44.5		43	1.85	2.5	15	50°		160	220	240	230	196
49.5	0 -0.30	49	2.1	2.5	17	50°		170	320	370	366	320
60.5		57	2.1	3	20	50°	0.020	220	410	589	549	464
74		76.5	2.6	3	25	50°		390	810	1480	1440	1180
85		86.5	3.15	3	30	50°	0.025	480	1020	1750	1740	1700

NKB Linear bearing
Europe series

NKB
STANDARD TYPE

NKB...AJ
ADJUSTMENT TYPE

NKB...OP
OPEN TYPE

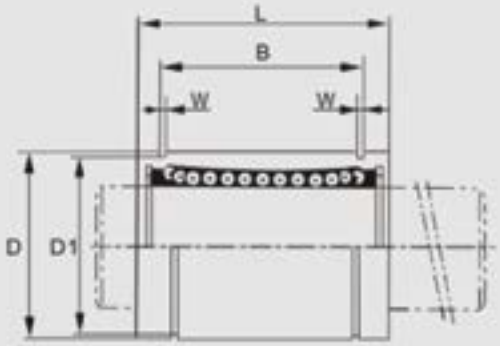

MODEL NO.	NUMBER OF BALL ROWS	MODEL NO.	NUMBER OF BALL ROWS	MODEL NO.	NUMBER OF BALL ROWS	MAIN DIMENSIONS					
						INSCRIBED CIRCLE DIAMETER		OUTER DIAMETER		LENGTH	
						dr	TOLERANCE	D	TOLERANCE	L	TOLERANCE
NKB3	4					3	+0.008 0	7	0 -0.008	10	0 -0.12
NKB4	4					4		8		12	
NKB5	4	NKB5AJ	4			5		12		22	0 -0.20
NKB8	4	NKB8AJ	4			8		16		25	
NKB10	4	NKB10AJ	4	NKB10OP	3	10		19	0 -0.009	29	
NKB12	4	NKB12AJ	4	NKB12OP	3	12		22		32	
NKB16	5	NKB16AJ	5	NKB16OP	4	16	+0.009 -0.001	26		36	
NKB20	5	NKB20AJ	5	NKB20OP	4	20		32	0 -0.011	45	
NKB25	6	NKB25AJ	6	NKB25OP	5	25	+0.011 -0.001	40		58	0 -0.30
NKB30	6	NKB30AJ	6	NKB30OP	5	30		47		68	
NKB40	6	NKB40AJ	6	NKB40OP	5	40	+0.013 -0.002	62	0 -0.013	80	
NKB50	6	NKB50AJ	6	NKB50OP	5	50		75		100	
NKB60	6	NKB60AJ	6	NKB60OP	5	60		90	0 -0.015	125	0 -0.40

Annotate: POM retainer, Steel retainer, stainless steel type, oilless series is the same.

NKB
STANDARD TYPE

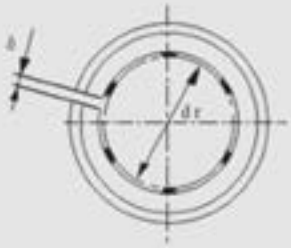

NKB...AJ
ADJUSTMENT TYPE

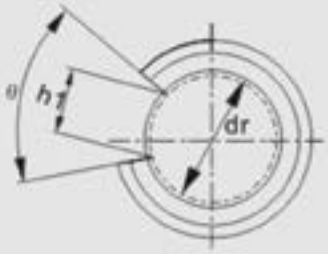

NKB...OP
OPEN TYPE

MAIN DIMENSIONS							ECCEN-TIRICITY (MAX.)	BASIC LOAD RATING		WEIGHT (g)		
OUTER LOCKING GROOVE			W	h	h1	θ		DYNAMIC C(kgf)	STATIC Co(kgf)			
B	TOLERANCE	D1										
							0.010	7	11			
								9	13			
14.5	0 -0.20	11.5	1.1	1			0.012	21	27	14		
16.5		15.2	1.1	1				27	41	20	20	
22		18	1.3	1.5	6.8	80°		38	47	30	29	22.5
22.9		21	1.3	1.5	7.5	78°		52	79	40	39	35
24.9		24.9	1.3	1.5	10	78°		59	91	50	49	38
31.5		30.3	1.6	2	10	60°	0.015	88	140	90	88	72
44.1	0 -0.30	37.5	1.85	2	12.5	60°		100	160	207	205	173
52.1		44.5	1.85	2	12.5	50°		160	280	320	319	267
60.6		59	2.15	3	16.8	50°	0.017	220	400	674	650	558
77.6		72	2.65	3	21	50°		390	810	1170	1160	990
101.7	0 -0.40	86.5	3.15	3	27.2	54°	0.020	480	1020	1950	1910	1700

NSW Linear bearing
Inch system series

NSW
STANDARD TYPE

NSW...AJ
ADJUSTMENT TYPE

NSW...OP
OPEN TYPE

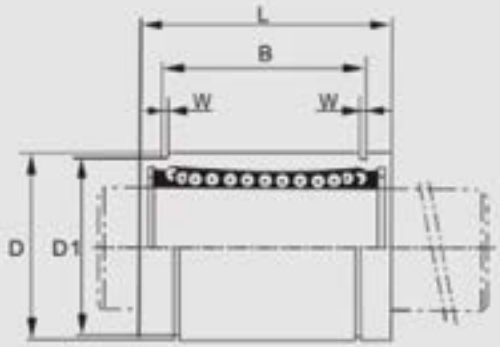

MODEL NO.	NUMBER OF BALL ROWS	MODEL NO.	NUMBER OF BALL ROWS	MODEL NO.	NUMBER OF BALL ROWS	MAIN DIMENSIONS					
						INSCRIBED CIRCLE DIAMETER		OUTER DIAMETER		LENGTH	
						dr	TOLERANCE	D	TOLERANCE	L	TOLERANCE
NSW4	4	NSW4AJ	4			1/4" 6.35	0 -0.009	0.5" 12.7	0 -0.011	0.75" 19.05	0 -0.20
NSW6	4	NSW6AJ	4			3/8" 9.525		0.625" 15.875	0 -0.013	0.875" 22.225	
NSW8	4	NSW8AJ	4	NSW8OP	3	1/2" 12.7		0.875" 22.225		1.25" 31.75	
NSW10	5	NSW10AJ	5	NSW10OP	4	5/8" 15.875		1.125" 28.575		1.5" 38.1	
NSW12	5	NSW12AJ	5	NSW12OP	4	3/4" 19.05	0 -0.010	1.25" 31.75	0 -0.016	1.625" 41.275	
NSW16	6	NSW16AJ	6	NSW16OP	5	1" 25.4		1.5625" 39.688		2.25" 57.15	0 -0.30
NSW20	6	NSW20AJ	6	NSW20OP	5	1-1/4" 31.75	0 -0.012	2" 50.8	0 -0.019	2.625" 66.675	
NSW24	6	NSW24AJ	6	NSW24OP	5	1-1/2" 38.1		2.375" 60.325		3" 76.2	
NSW32	6	NSW32AJ	6	NSW32OP	5	2" 50.8		3" 76.2	0 -0.022	4" 101.6	

Annotate: NSW16 steel retainer the number of ball rows is 5, POM retainer the number of ball rows is 6.
NSW16AJ steel retainer the number of ball rows is 5, POM retainer the number of ball rows is 6.
NSW16AJ steel retainer the number of ball rows is 4, POM retainer the number of ball rows is 5.

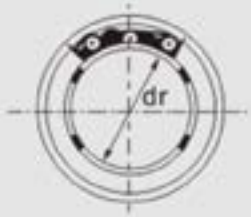

NSW
STANDARD TYPE

NSW...AJ
ADJUSTMENT TYPE

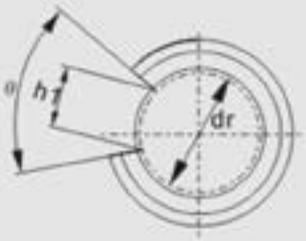

NSW...OP
OPEN TYPE

MAIN DIMENSIONS							ECCEN-TIRICITY (MAX.)	BASIC LOAD RATING		WEIGHT (g)		
OUTER LOCKING GROOVE			W	h	h1	θ		DYNAMIC C(kgf)	STATIC Co(kgf)			
B	TOLERANCE	D1										
0.511" 12.98	0 -0.20	0.4687" 11.906	0.039" 0.992	0.04" 1			0.012	21	27	64		
0.6385" 16.15		0.588" 14.935	0.039" 0.992	0.04" 1				23	32	14		
0.9525" 24.46		0.8209" 20.853	0.0459" 1.168	0.06" 1.5	0.34" 7.9375	80°		52	80	40		25
1.1039" 28.04		1.059" 26.899	0.0559" 1.422	0.06" 1.5	0.375" 9.525	80°		79	120	76		
1.1657" 29.61		1.176" 29.87	0.0559" 1.422	0.06" 1.5	0.4375" 11.1125	60°	0.015	88	140	90		70
1.7547" 44.57	0 -0.30	1.4687" 37.306	0.0679" 1.727	0.06" 1.5	0.5625" 14.2875	50°		100	160	206		167.5
2.0047" 50.92		1.8859" 47.904	0.0679" 1.727	0.10" 2.54	0.625" 15.875	50°	0.020	160	280	370		304
2.4118" 61.26		2.2389" 56.87	0.859" 2.184	0.12" 3	0.75" 19.05	50°		220	410	584		490
3.1917" 81.07		2.8379" 72.085	0.1029" 2.616	0.12" 3	1" 25.4	50°	0.025	390	810	600		980

NLM Long type linear bearing
Asia series

NLM...L
LONG TYPE

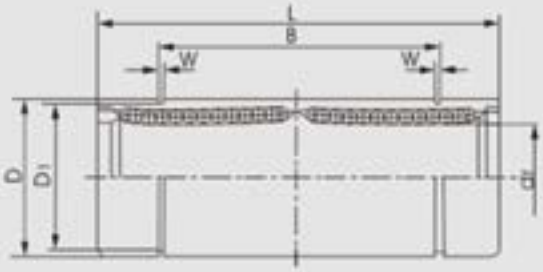

MODEL NO.	NUMBER OF BALL ROWS	MAIN DIMENSIONS										ECCEN-TRICITY (MAX.)	BASIC LOAD RATING		WEIGHT (g)
		INSCRIBED CIRCLE DIAMETER		OUTER DIAMETER		LENGTH		OUTER LOCKING GROOVE			W		DYNAMIC C(kgf)	STATIC Co(kgf)	
		dr	TOLERANCE	D	TOLERANCE	L	TOLERANCE	B	TOLERANCE	D1					
NLM6L	4	6	0 -0.010	12	0 -0.013	35	0 -0.30	27	0 -0.30	11.5	1.1	0.015	33	54	14
NLM8L	4	8		15		45		35		14.3	1.1		44	80	26
NLM10L	4	10		19	0 -0.016	55		44		18	1.3		60	112	55
NLM12L	4	12		21		57		46		20	1.3		83	160	58
NLM13L	4	13		23		61		46		22	1.3		83	160	77
NLM16L	5	16		28		70		53		27	1.6		126	240	147
NLM20L	5	20	0 -0.012	32	0 -0.019	80		61		30.5	1.6	0.020	143	280	171
NLM25L	6	25		40		112		82		38	1.85		159	320	400
NLM30L	6	30		45		123	0 -0.40	89	0 -0.40	43	1.85		254	560	472
NLM35L	6	35	0 -0.015	52	0 -0.022	135		99		49	2.1	0.025	270	640	708
NLM40L	6	40		60		151 (154)		121		57	2.1		350	820	1090
NLM50L	6	50		80		192		148		76.5	2.6		620	1622	2800
NLM60L	6	60	0 -0.020	90	0 -0.025	209		170		86.5	3.15		770	2040	3800

NKB Long type linear bearing

Europe series

NKB...L

LONG TYPE

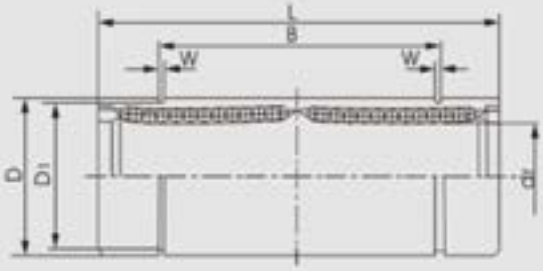

MODEL NO.	NUMBER OF BALL ROWS	MAIN DIMENSIONS										ECCEN-TRICITY (MAX.)	BASIC LOAD RATING		WEIGHT (g)
		INSCRIBED CIRCLE DIAMETER		OUTER DIAMETER		LENGTH		OUTER LOCKING GROOVE			W		DYNAMIC C(kgf)	STATIC Co(kgf)	
		dr	TOLERANCE	D	TOLERANCE	L	TOLERANCE	B	TOLERANCE	D1					
NKB8L	4	8	+0.009 -0.001	16	0 -0.009	46	0 -0.30	33	0 -0.30	15.2	1.1	0.015	43	82	36
NKB10L	4	10		19	0 -0.011	55		44		18	1.3		60	112	59
NKB12L	4	12		22		61		45.8		21	1.3		83	160	78
NKB16L	5	16	+0.011 -0.001	26		68		49.8		24.9	1.3		94	182	97
NKB20L	5	20		32	0 -0.013	80		61		30.5	1.6	0.017	140	280	169
NKB25L	6	25	+0.013 -0.002	40		112	0 -0.40	82	0 -0.40	38	1.85		160	320	414
NKB30L	6	30		47		123		104.2		44.5	1.85		255	560	586
NKB40L	6	40	+0.016 -0.004	62	0 -0.015	151		121.2		59	2.15	0.020	350	820	1310
NKB50L	6	50		75		192		155.2		72	2.65		620	1622	2500
NKB60L	6	60		90	0 -0.020	209		170		86.5	3.15	0.025	770	2040	3700

NSW Long type linear bearing

Inch system series

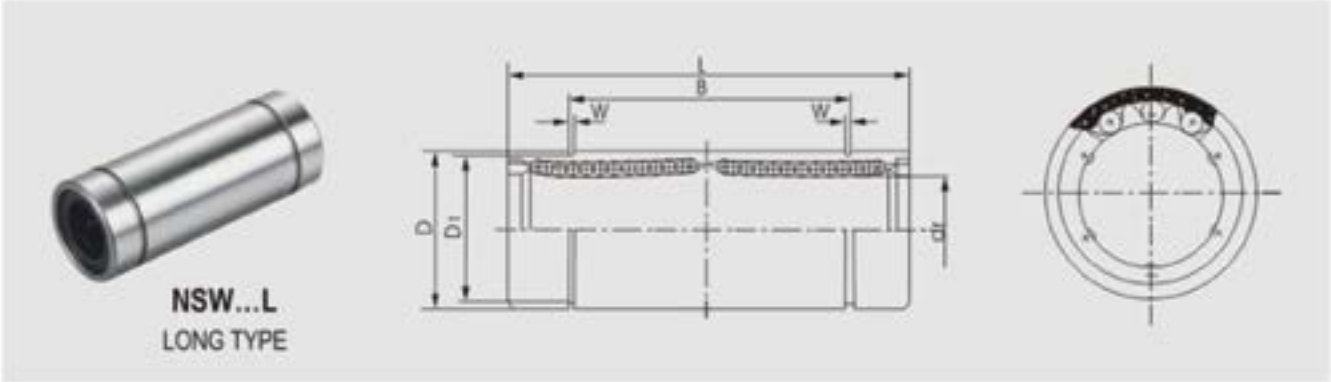

MODEL NO.	NUMBER OF BALL ROWS	MAIN DIMENSIONS										ECCEN-TRICITY (MAX.)	BASIC LOAD RATING		WEIGHT (g)
		INSCRIBED CIRCLE DIAMETER		OUTER DIAMETER		LENGTH		OUTER LOCKING GROOVE			W		DYNAMIC C(kgf)	STATIC Co(kgf)	
		dr	TOLERANCE	D	TOLERANCE	L	TOLERANCE	B	TOLERANCE	D1					
NSW4L	3	1/4" 6.35	0 -0.011	0.5" 12.7	0 -0.013	1.375" 34.925	0 -0.30	1.022" 25.959	0 -0.30	0.4687" 11.906	0.039" 0.992	0.015	33	54	14
NSW6L	4	3/8" 9.525		0.625" 15.875	0 -0.016	1.5938" 40.481		1.2716" 32.298		0.588" 14.935	0.039" 0.992		36	64	30
NSW8L	4	1/2" 12.7		0.875" 22.225		2.375" 60.325		1.925" 48.895		0.8209" 20.853	0.0459" 1.168		83	160	82
NSW10L	4	5/8" 15.875		1.125" 28.575		2.8125" 71.438		2.2079" 56.08		1.059" 26.899	0.0559" 1.422		126	240	156
NSW12L	5	3/4" 19.05	0 -0.012	1.25" 31.75	0 -0.019	3.0937" 78.581		2.3314" 59.218		1.176" 29.87	0.0559" 1.422	0.020	140	280	184
NSW16L	6	1" 25.4		1.5625" 39.688		4.2813" 108.744	0 -0.40	3.5094" 89.139	0 -0.40	1.4687" 37.306	0.0679" 1.727		160	320	418
NSW20L	6	1-1/4" 31.75	0 -0.015	2" 50.8	0 -0.022	5" 127		4.0094" 101.839		1.8859" 47.904	0.0679" 1.727	0.025	255	360	746
NSW24L	6	1-1/2" 38.1		2.375" 60.325		5.6875" 144.463		4.8236" 122.519		2.2389" 56.87	0.859" 2.184		350	820	
NSW32L	6	2" 50.8		3" 76.2	0 -0.025	7.75" 196.85		6.3834" 162.138		2.8379" 72.085	0.1029" 2.616	0.030	620	1622	1206

Annotate:NSW16L steel retainer the number of ball rows is 5, POM retainer the number of ball rows is 6.

KH Mini (pressing bush) linear bearing

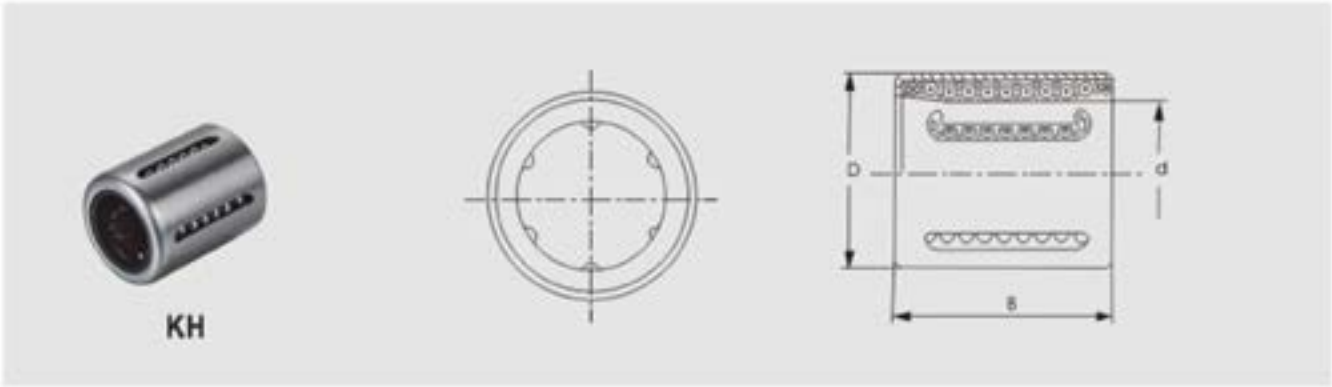

MODEL NO.	NUMBER OF BALL ROWS	MAIN DIMENSIONS			BASIC LOAD RATING		WEIGHT(g)
		d	D	B	DYNAMIC C(kgf)	STATIC Co(kgf)	
KH0824	4	8	15	24	44	29	11.3
KH1026	4	10	17	26	51	38	14.4
KH1228	5	12	19	28	63	52	18.1
KH1428	5	14	21	28	63	52	20.6
KH1630	5	16	24	30	82	63	27.2
KH2030	6	20	28	30	97	81	32.7
KH2540	6	25	35	40	203	170	66
KH3050	7	30	40	50	286	276	95
KH4060	8	40	52	60	449	454	180
KH5070	9	50	62	70	561	643	250

NSLM Super type linear bearing
Asia series

NSLM
STANDARD TYPE

NSLM...OP
OPEN TYPE

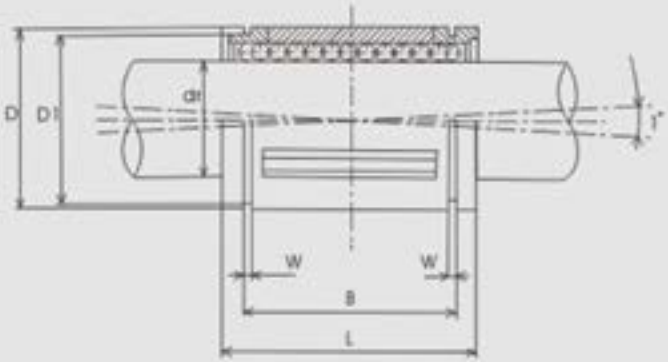

NSLM
STANDARD TYPE

NSLM...OP
OPEN TYPE

MODEL NO.	NUMBER OF BALL ROWS	MODEL NO.	NUMBER OF BALL ROWS	MAIN DIMENSIONS								BASIC LOAD RATING		WEIGHT (Kg)	
				dr	D	L	D1	B	W	E	α	DYNAMIC C(kgf)	STATIC Co(kgf)		
NSLM16	5	NSLM16OP	4	16	28	37	27	26.5	1.6	11	80°	153	128	0.0415	0.0345
NSLM20	6	NSLM20OP	5	20	32	42	30.5	30.5	1.6	11	60°	263	170	0.0655	0.055
NSLM25	6	NSLM25OP	5	25	40	59	38	41	1.85	12	50°	388	281	0.134	0.114
NSLM30	6	NSLM30OP	5	30	45	64	43	44.5	1.85	15	50°	481	286	0.152	0.130
NSLM40	6	NSLM40OP	5	40	60	80	57	60.5	2.1	20	50°	663	584		
NSLM50	6	NSLM50OP	5	50	80	100	76.5	74	2.6	25	50°	1169	810		

Annotate: NSLM type can crossing-over with LM.
NSLM···OP type can crossing-over with LM···OP.

NSKB Super type linear bearing

Europe series

NSKB
STANDARD TYPE

NSKB...OP
OPEN TYPE

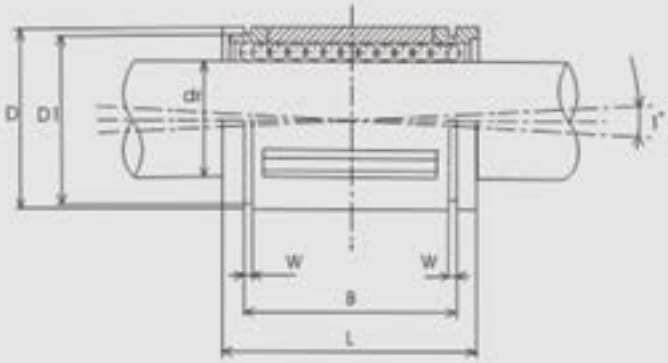

NSKB
STANDARD TYPE

NSKB...OP
OPEN TYPE

MODEL NO.	NUMBER OF BALL ROWS	MODEL NO.	NUMBER OF BALL ROWS	MAIN DIMENSIONS								BASIC LOAD RATING				WEIGHT (Kg)	
				dr	D	L	D1	B	W	E	α	DYNAMIC C(kgf)	STATIC Co(kgf)	DYNAMIC C(kgf)	STATIC Co(kgf)		
NSKB12	5			12	22	32	21	22.7	1.35			126	112			0.021	
NSKB16	5	NSKB16OP	4	16	26	36	24.9	24.7	1.35	9	68°	153	128	167	135	0.043	0.035
NSKB20	6	NSKB20OP	5	20	32	45	30.3	31.3	1.65	9	55°	263	170	268	176	0.058	0.048
NSKB25	6	NSKB25OP	5	25	40	58	37.5	43.8	1.90	11.5	57°	388	281	399	291	0.123	0.103
NSKB30	6	NSKB30OP	5	30	47	68	44.5	51.8	1.90	14	57°	481	286	495	296	0.216	0.177
NSKB40	6	NSKB40OP	5	40	62	80	59	60.4	2.20	19.5	56°	663	584	684	602	0.333	0.275
NSKB50	6	NSKB50OP	5	50	75	100	72	77.4	2.70	22.5	54°	1169	810	1194	827	0.618	0.520

Annotate:NSKB type can crossing-over with LM.
NSKB···OP type can crossing-over with KB···OP.

NSSW Super type linear bearing

Inch system series

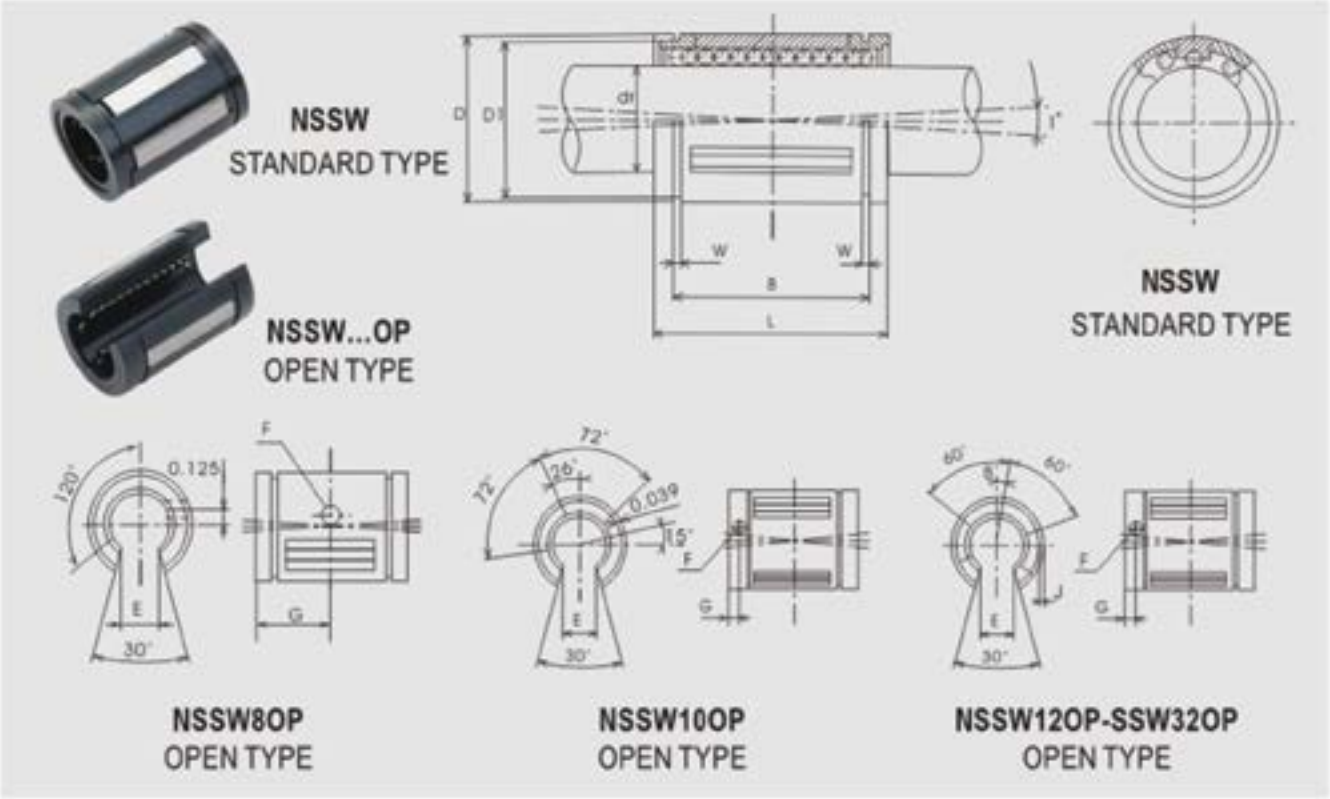

MODEL NO.	NUMBER OF BALL ROWS	MODEL NO.	NUMBER OF BALL ROWS	MAIN DIMENSIONS										BASIC LOAD RATING		WEIGHT (Kg)
				dr	D	L	D1	B	W	E	F	G	J	DYNAMIC C(kgf)	STATIC Co(kgf)	
NSSW4	4	—	—	1/4" 6.35	0.5" 12.7	0.75" 19.05	0.4687" 11.906	0.515" 13.081	0.039" 0.991	—	—	—	—	27	36	0.005
NSSW6	6	—	—	3/8" 9.525	0.625" 15.875	0.875" 22.225	0.588" 14.935	0.703" 17.856	0.039" 0.991	—	—	—	—	43	55	0.007
NSSW8	4	NSSW8OP	4	1/2" 12.7	0.875" 22.225	1.25" 31.75	0.8209" 20.85	1.032" 26.213	0.0459" 1.166	0.313" 7.95	0.136" 3.45	0.625" 15.875	Thru	104	132	0.023
NSSW10	5	NSSW10OP	4	5/8" 15.875	1.125" 28.575	1.5" 38.1	1.059" 26.899	1.112" 28.245	0.0559" 1.42	0.375" 9.525	0.105" 2.667	0.125" 3.175	0.039" 0.991	182	228	0.035
NSSW12	5	NSSW12OP	5	3/4" 19.05	1.25" 31.75	1.625" 41.275	1.176" 29.87	1.272" 32.309	0.0559" 1.42	0.438" 11.125	0.136" 3.454	0.125" 3.175	0.059" 1.499	213	268	0.07
NSSW16	6	NSSW16OP	5	1" 25.4	1.5625" 39.688	2.25" 57.15	1.4687" 37.305	1.886" 47.904	0.0679" 1.725	0.563" 14.3	0.136" 3.454	0.125" 3.175	0.047" 1.194	386	481	0.142
NSSW20	6	NSSW20OP	5	1-1/4" 31.75	2" 50.8	2.625" 66.675	1.8859" 47.9	2.011" 51.079	0.0679" 1.725	0.625" 15.875	0.201" 5.105	0.1875" 4.763	0.09" 2.286	558	695	0.27
NSSW24	6	NSSW24OP	5	1-1/2" 38.1	2.375" 60.325	3" 76.2	2.2389" 56.868	2.422" 61.519	0.0859" 2.185	0.75" 19.05	0.201" 5.105	0.1875" 4.763	0.09" 2.286	672	840	0.371
NSSW32	6	NSSW32OP	5	2" 50.8	3" 76.2	4" 101.6	2.8379" 72.083	3.206" 81.432	0.1029" 2.614	1" 25.4	0.265" 6.731	0.3125" 7.938	Thru	1102	1377	0.64

Annotate: NSSW type can crossing–over with SW.
NSSW···OP type can crossing–over with SW···OP.

NLMF Circular flange type linear bearing
NLMK Square flange type linear bearing
Asia series

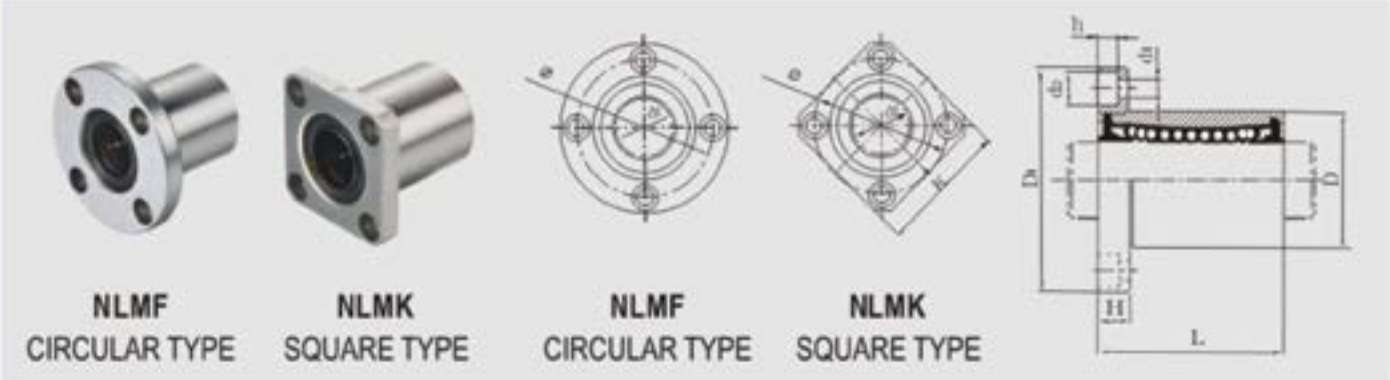

MODEL NO.	MODEL NO.	NUMBER OF BALL ROWS	MAIN DIMENSIONS													SQUAR-ENESS	ECCEN-TRICITY (MAX.)	BASIC LOAD RATING		WEIGHT (Kg)	
			INSCRIBED CIRCLE DIAMETER		OUTER DIAMETER		LENGTH		FLANGE				HOLE FOR ATTACHMENT					DYNAMIC C(kgf)	STATIC Co(kgf)		
			dr	TOLERANCE	D	TOLERANCE	L	TOLERANCE	D1	K	H	Φ	d1	d2	h						
NLMF6	NLMK6	4	6	0 −0.009	12	0 −0.011	19	0 -0.20	28	22	5	20	3.5	6	3.1	0.012	0.012	21	27	0.022	0.017
NLMF8S	NLMK8S	4	8		15		17		32	25	5	24	3.5	6	3.1			18	22		
NLMF8	NLMK8	4	8		15		24		32	25	5	24	3.5	6	3.1			28	40	0.035	0.027
NLMF10	NLMK10	4	10		19	0 −0.013	29		40	30	6	29	4.5	7.5	4.1			38	56	0.066	0.047
NLMF12	NLMK12	4	12		21		30		42	32	6	32	4.5	7.5	4.1			52	80	0.070	0.053
NLMF13	NLMK13	4	13		23		32		43	34	6	33	4.5	7.5	4.1			52	80	0.079	0.064
NLMF16	NLMK16	5	16		28		37		48	37	6	38	4.5	7.5	4.1			79	120	0.122	0.102
NLMF20	NLMK20	5	20	0 −0.010	32	0 −0.016	42		54	42	8	43	5.5	9	5.1	0.015	0.015	90	140	0.163	0.12
NLMF25	NLMK25	6	25		40		59	0 -0.30	62	50	8	51	5.5	9	5.1			100	160	0.311	0.272
NLMF30	NLMK30	6	30		45		64		74	58	10	60	6.6	11	6.1			160	280	0.42	0.34
NLMF35	NLMK35	6	35	0 −0.012	52	0 −0.019	70		82	64	10	67	6.6	11	6.1	0.020	0.020	170	320	0.60	0.496
NLMF40	NLMK40	6	40		60		80		96	75	13	78	9	14	8.1			220	410	0.749	0.773
NLMF50	NLMK50	6	50		80		100		116	92	13	98	9	14	8.1			390	810	1.96	1.72
NLMF60	NLMK60	6	60	0 −0.015	90	0 −0.022	110		134	106	18	112	11	17.5	10.8	0.025	0.025	480	1020	2.70	2.25

NLMFP Pilot pattern circular flange type linear bearing

NLMKP Pilot pattern square flange type linear bearing

Asia series

NLMFP
PILOT PATTERN
CIRCULAR TYPE

NLMKP
PILOT PATTERN
SQUARE TYPE

NLMFP
PILOT PATTERN
CIRCULAR TYPE

NLMKP
PILOT PATTERN
SQUARE TYPE

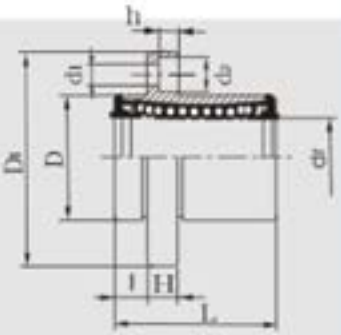

MODEL NO.	MODEL NO.	NUMBER OF BALL ROWS	MAIN DIMENSIONS														SQUARENESS	ECCENTRICITY (MAX.)	BASIC LOAD RATING		WEIGHT (Kg)	
			INSCRIBED CIRCLE DIAMETER		OUTER DIAMETER		LENGTH		l	FLANGE				HOLE FOR ATTACHMENT					DYNAMIC C(kgf)	STATIC Co(kgf)		
			dr	TOLERANCE	D	TOLERANCE	L	TOLERANCE		D1	K	H	Φ	d1	d2	h						
NLMFP6	NLMKP6	4	6	0 −0.009	12	0 −0.013	19	0 -0.20	5	28	22	5	20	3.5	6	3.1	0.012	0.012	21	27	0.022	0.017
NLMFP8	NLMKP8	4	8		15		24		5	32	25	5	24	3.5	6	3.1			28	40	0.035	0.027
NLMFP10	NLMKP10	4	10		19	0 −0.016	29		6	40	30	6	29	4.5	7.5	4.1			38	56	0.065	0.047
NLMFP12	NLMKP12	4	12		21		30		6	42	32	6	32	4.5	7.5	4.1			52	80	0.072	0.053
NLMFP13	NLMKP13	4	13		23		32		6	43	34	6	33	4.5	7.5	4.1			52	80	0.079	0.064
NLMFP16	NLMKP16	5	16		28		37		6	48	37	6	38	4.5	7.5	4.1			79	120	0.123	0.102
NLMFP20	NLMKP20	5	20	0 −0.010	32	0 −0.019	42		8	54	42	8	43	5.5	9	5.1	0.015	0.015	90	140	0.161	0.129
NLMFP25	NLMKP25	6	25		40		59	0 -0.30	8	62	50	8	51	5.5	9	5.1			100	160	0.309	0.272
NLMFP30	NLMKP30	6	30		45		64		10	74	58	10	60	6.6	11	6.1			160	280	0.42	0.34
NLMFP35	NLMKP35	6	35	0 −0.012	52	0 −0.022	70		10	82	64	10	67	6.6	11	6.1	0.020	0.020	170	320	0.60	0.496
NLMFP40	NLMKP40	6	40		60		80		13	96	75	13	78	9	14	8.1			220	410	0.749	0.773
NLMFP50	NLMKP50	6	50		80		100		13	116	92	13	98	9	14	8.1			390	810	1.96	1.72
NLMFP60	NLMKP60	6	60	0 −0.015	90	0 −0.025	110		18	134	106	18	112	11	17.5	10.8	0.025	0.025	480	1020	2.80	2.70

NLMT Oval flange type linear bearing

Asia series

NLMT

OVAL TYPE

NLMT6-NLMT13

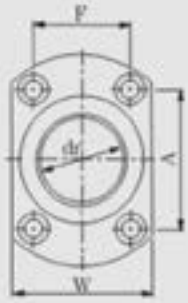

NLMT16-NLMT40

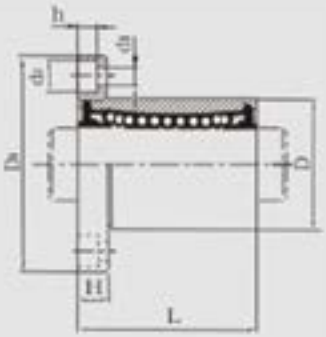

MODEL NO.	NUMBER OF BALL ROWS	MAIN DIMENSIONS														SQUAR-ENESS	ECCEN-TRICITY (MAX.)	BASIC LOAD RATING		WEIGHT (Kg)
		INSCRIBED CIRCLE DIAMETER		OUTER DIAMETER		LENGTH		FLANGE					HOLE FOR ATTACHMENT					DYNAMIC C(kgf)	STATIC Co(kgf)	
		dr	TOLERANCE	D	TOLERANCE	L	TOLERANCE	D1	W	H	A	F	d1	d2	h					
NLMT6	4	6	0 −0.009	12	0 −0.011	19	0 -0.20	28	18	5	20		3.5	6	3.1	0.012	0.012	21	27	0.019
NLMT8	4	8		15		24		32	21	5	24		3.5	6	3.1			27	41	0.029
NLMT10	4	10		19	0 −0.013	29		40	25	6	29		4.5	7.5	4.1			38	56	0.054
NLMT12	4	12		21		30		42	27	6	32		4.5	7.5	4.1			42	61	0.058
NLMT13	4	13		23		32		43	29	6	33		4.5	7.5	4.1			52	79	0.072
NLMT16	5	16		28		37		48	34	6	31	22	4.5	7.5	4.1			79	120	0.109
NLMT20	5	20	0 −0.010	32	0 −0.016	42		54	38	8	36	24	5.5	9	5.1	0.015	0.015	88	140	0.135
NLMT25	6	25		40		59	0 -0.30	62	46	8	40	32	5.5	9	5.1			100	160	0.28
NLMT30	6	30		45		64		74	51	10	49	35	6.6	11	6.1			160	280	0.35
NLMT35	6	35	0 −0.012	52	0 −0.019	70		82	60	10	55	38	6.6	11	6.1	0.020	0.020	170	320	0.524
NLMT40	6	40		60		80		96	70	13	64	45	9	14	8.1			220	410	0.836

NLMTP Pilot pattern oval flange type
Asia series

NLMTP
PILOT PATTERN
OVAL FLANGE TYPE

NLMTP6-NLMTP13

NLMTP16-NLMTP40

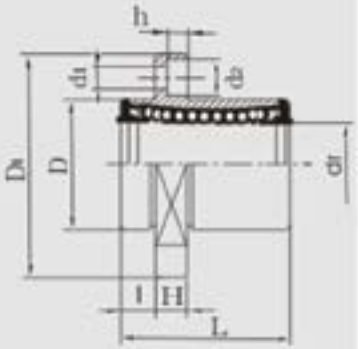

MODEL NO.	NUMBER OF BALL ROWS	MAIN DIMENSIONS															SQUAR-ENESS	ECCEN-TRICITY (MAX.)	BASIC LOAD RATING		WEIGHT (Kg)
		INSCRIBED CIRCLE DIAMETER		OUTER DIAMETER		LENGTH		I	FLANGE					HOLE FOR ATTACHMENT					DYNAMIC C(kgf)	STATIC Co(kgf)	
		dr	TOLERANCE	D	TOLERANCE	L	TOLERANCE		D1	W	H	A	F	d1	d2	h					
NLMTP6	4	6	0 −0.009	12	0 −0.013	19	0 -0.20	5	28	18	5	20		3.5	6	3.1	0.012	0.012	21	27	0.019
NLMTP8	4	8		15		24		5	32	21	5	24		3.5	6	3.1			27	41	0.028
NLMTP10	4	10		19	0 −0.016	29		6	40	25	6	29		4.5	7.5	4.1			38	56	0.057
NLMTP12	4	12		21		30		6	42	27	6	32		4.5	7.5	4.1			42	61	0.062
NLMTP13	4	13		23		32		6	43	29	6	33		4.5	7.5	4.1			52	79	0.072
NLMTP16	5	16		28		37		6	48	34	6	31	22	4.5	7.5	4.1			79	120	0.105
NLMTP20	5	20	0 −0.010	32	0 −0.019	42		8	54	38	8	36	24	5.5	9	5.1	0.015	0.015	88	140	0.146
NLMTP25	6	25		40		59	0 -0.30	8	62	46	8	40	32	5.5	9	5.1			100	160	0.22
NLMTP30	6	30		45		64		10	74	51	10	49	35	6.6	11	6.1			160	280	0.37
NLMTP35	6	35	0 −0.012	52	0 −0.022	70		10	82	60	10	55	38	6.6	11	6.1	0.020	0.020	170	320	0.52
NLMTP40	6	40		60		80		13	96	70	13	64	45	9	14	8.1			220	410	0.828

NKBF Circular flange type
NKBK Square flange type
Europe series

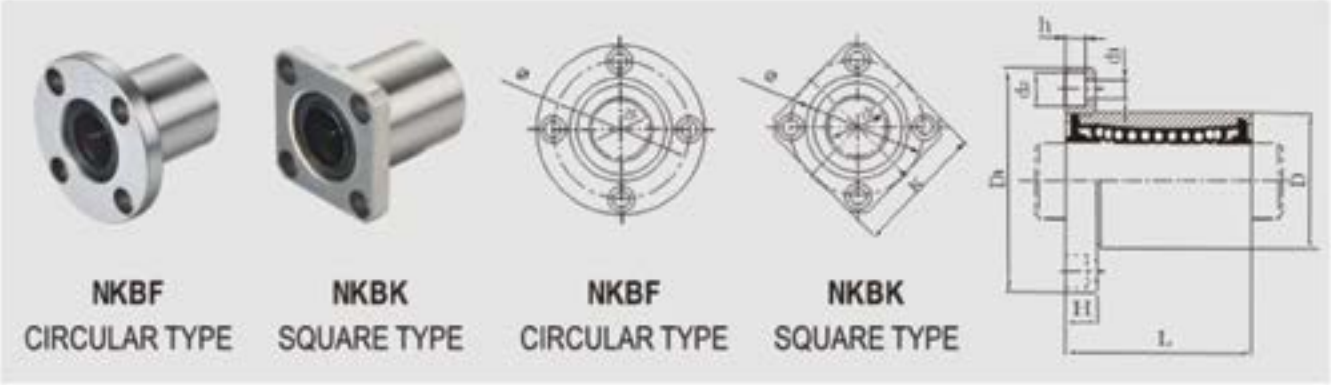

MODEL NO.	MODEL NO.	NUMBER OF BALL ROWS	MAIN DIMENSIONS													SQUAR-ENESS	ECCEN-TRICITY (MAX.)	BASIC LOAD RATING		WEIGHT (Kg)	
			INSCRIBED CIRCLE DIAMETER		OUTER DIAMETER		LENGTH		FLANGE				HOLE FOR ATTACHMENT								
			dr	TOLERANCE	D	TOLERANCE	L	TOLERANCE	D1	K	H	Φ	d1	d2	h			DYNAMIC C(kgf)	STATIC Co(kgf)		
NKBF5	NKBK5	4	5	+0.008	12	0 −0.008	22	0 -0.20	28	22	5	20	3.5	6	3.1	0.012	0.012	21	27		
NKBF8	NKBK8	4	8		16		25		32	25	5	24	3.5	6	3.1			27	41	0.039	0.032
NKBF10	NKBK10	4	10		19	0 −0.009	29		40	30	6	29	4.5	7.5	4.1			38	56	0.055	0.048
NKBF12	NKBK12	4	12		22		32		42	32	6	32	4.5	7.5	4.1			52	80	0.079	0.062
NKBF16	NKBK16	5	16	+0.009 −0.001	26		36		46	35	6	36	4.5	7.5	4.1			59	91	0.106	0.074
NKBF20	NKBK20	5	20		32	0 −0.011	45		54	42	8	43	5.5	9	5.1	0.015	0.015	88	140	0.171	0.137
NKBF25	NKBK25	6	25	+0.011 −0.001	40		58	0 -0.30	62	50	8	51	5.5	9	5.1			100	160	0.308	0.265
NKBF30	NKBK30	6	30		47		68		76	60	10	62	6.6	11	6.1			160	280	0.594	0.43
NKBF40	NKBK40	6	40	+0.013 −0.002	62	0 −0.013	80		98	75	13	80	9	14	8.1	0.017	0.017	220	410	1.098	0.88
NKBF50	NKBK50	6	50		75		100		112	88	13	94	9	14	8.1			390	810	1.67	1.46
NKBF60	NKBK60	6	60		90	0 −0.015	125	0 -0.40	134	106	18	112	11	17.5	10.8	0.020	0.020	480	1000	3.00	2.60

NSWF Circular flange type linear bearing

NSWK Square flange type linear bearing

Inch system series

NSWF
CIRCULAR TYPE

NSWK
SQUARE TYPE

NSWF
CIRCULAR TYPE

NSWK
SQUARE TYPE

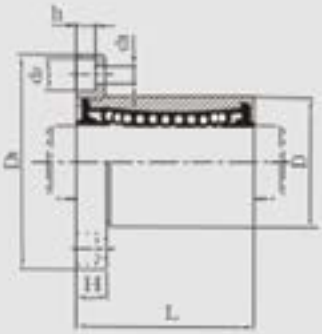

MODEL NO.	NUMBER OF BALL ROWS	MAIN DIMENSIONS													SQUAR-ENESS	ECCEN-TRICITY (MAX.)	BASIC LOAD RATING		WEIGHT (Kg)	
		INSCRIBED CIRCLE DIAMETER		OUTER DIAMETER		LENGTH		FLANGE				HOLE FOR ATTACHMENT								
		dr	TOLERANCE	D	TOLERANCE	L	TOLERANCE	D1	K	H	Φ	d1	d2	h			DYNAMIC C(kgf)	STATIC Co(kgf)	K	F
NSWF4 NSWK4	4	1/4" 6.35	0 −0.009	0.5" 12.7	0 −0.011	0.75" 19.05	0 −0.20	1.25" 31.75	1" 25.4	0.219" 5.556	0.875" 22.225	0.156" 3.969	0.25" 6.35	0.141" 3.572	0.012	0.012	21	27	0.0245	0.03
NSWF6 NSWK6	4	3/8" 9.525		0.625" 15.875	0 −0.013	0.875" 22.225		1.5" 38.1	1.25" 31.75	0.25" 6.35	1.062" 26.988	0.1875" 4.763	0.297" 7.541	0.172" 4.366			23	32	0.0293	0.037
NSWF8 NSWK8	4	1/2" 12.7		0.875" 22.225		1.25" 31.75		1.75" 44.45	1.375" 34.925	0.25" 6.35	1.312" 33.338	0.1875" 4.763	0.297" 7.541	0.172" 4.366			52	80	0.0637	0.80
NSWF10 NSWK10	4	5/8" 15.875		1.125" 28.575		1.5" 38.1		2" 50.8	1.5" 38.1	0.25" 6.35	1.562" 39.688	0.1875" 4.763	0.297" 7.541	0.172" 4.366			79	120	0.1055	0.127
NSWF12 NSWK12	4	3/4" 19.05	0 −0.010	1.25" 31.75	0 −0.016	1.625" 41.275		2.1875" 55.563	1.6875" 42.863	0.3125" 7.938	1.718" 43.66	0.2187" 5.556	0.344" 8.731	0.203" 5.159	0.015	0.015	88	140	0.136	0.173
NSWF16 NSWK16	6	1" 25.4		1.5625" 39.688		2.25" 57.15	0 −0.30	2.5" 63.5	2" 50.8	0.3125" 7.938	2.031" 51.594	0.2187" 5.556	0.344" 8.731	0.203" 5.159			100	160	0.263	0.303
NSWF20 NSWK20	6	1-1/4" 31.75	−0.012	2" 50.8	0 −0.019	2.625" 66.675		3.125" 79.375	2.5" 63.5	0.375" 9.525	2.5625" 65.088	0.2812" 7.144	0.406" 10.319	0.2656" 6.747	0.020	0.020	160	280	0.493	0.585
NSWF24 NSWK24	6	1-1/2" 38.1		2.375" 60.325		3" 76.2		3.75" 95.25	3" 76.2	0.5" 12.7	3.0625" 77.788	0.344" 8.731	0.5" 12.7	0.328" 8.334			222	410	0.808	0.992
NSWF32 NSWK32	6	2" 50.8		3" 76.2	0 −0.022	4" 101.6		4.375" 111.125	3.5" 88.9	0.5" 12.7	3.6875" 93.662	0.344" 8.731	0.5" 12.7	0.328" 8.334	0.025	0.025	390	810	1.505	1.705

Annotate: NSWF16L steel retainer the number of ball rows is 5, POM retainer the number of ball rows is 6.

NLMF Long circular flange type linear bearing

NLMK Long square flange type linear bearing

Asia series

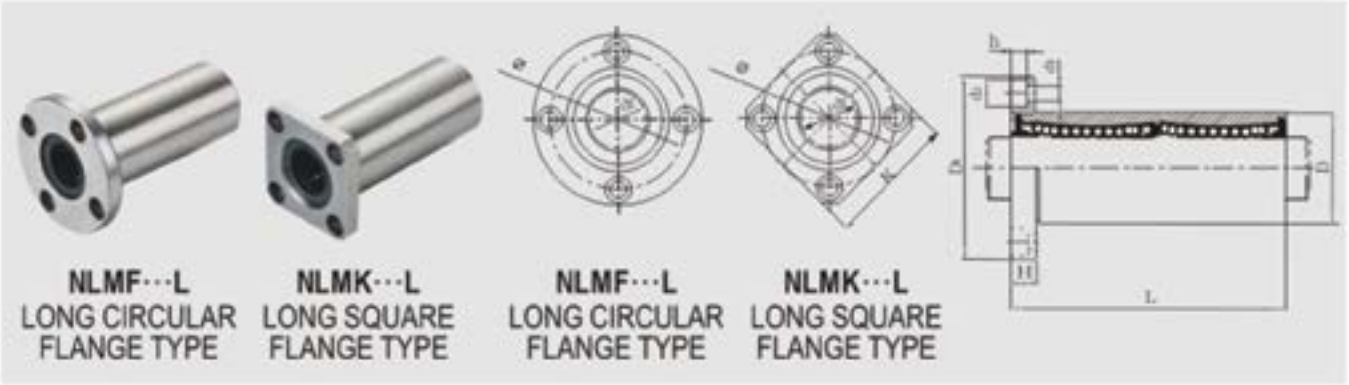

MODEL NO.	MODEL NO.	NUMBER OF BALL ROWS	MAIN DIMENSIONS													SQUARENESS	ECCENTRICITY (MAX.)	BASIC LOAD RATING		WEIGHT (Kg)	
			INSCRIBED CIRCLE DIAMETER		OUTER DIAMETER		LENGTH		FLANGE				HOLE FOR ATTACHMENT								
			dr	TOLERANCE	D	TOLERANCE	L	TOLERANCE	D1	K	H	Φ	d1	d2	h			DYNAMIC C(gf)	STATIC Co(gf)	F	K
NLMF6L	NLMK6L	4	6	0 −0.01	12	0 −0.013	35	0 -0.30	28	22	5	20	3.5	6	3.1	0.015	0.015	33	54	0.031	0.023
NLMF8L	NLMK8L	4	8		15		45		32	25	5	24	3.5	6	3.1			44	80	0.048	0.043
NLMF10L	NLMK10L	4	10		19	0 −0.016	55		40	30	6	29	4.5	7.5	4.1			60	112	0.089	0.074
NLMF12L	NLMK12L	4	12		21		57		42	32	6	32	4.5	7.5	4.1			83	160	0.095	0.08
NLMF13L	NLMK13L	4	13		23		61		43	34	6	33	4.5	7.5	4.1			83	160	0.12	0.11
NLMF16L	NLMK16L	5	16		28		70		48	37	6	38	4.5	7.5	4.1			126	240	0.19	0.157
NLMF20L	NLMK20L	5	20	0 −0.012	32	0 −0.019	80		54	42	8	43	5.5	9	5.1	0.020	0.020	143	280	0.25	0.213
NLMF25L	NLMK25L	6	25		40		112	0 -0.40	62	50	8	51	5.5	9	5.1			159	320	0.507	0.473
NLMF30L	NLMK30L	6	30		45		123		74	58	10	60	6.6	11	6.1			254	560	0.643	0.57
NLMF35L	NLMK35L	6	35	0 −0.015	52	0 −0.022	135		82	64	10	67	6.6	11	6.1	0.025	0.025	270	640	0.95	0.91
NLMF40L	NLMK40L	6	40		60		151 154		96	75	13	78	9	14	8.1			350	820	1.48	1.31
NLMF50L	NLMK50L	6	50		80		192		116	92	13	98	9	14	8.1			620	1622	3.79	3.10
NLMF60L	NLMK60L	6	60	0 −0.020	90	0 −0.025	209		134	106	18	112	11	17.5	10.8			770	2040	4.40	3.5

NLMFP···L Long pilot pattern circular flange type

NLMKP···L Long pilot pattern square flange type

Asia Series

NLMFP···L

LONG PILOT PATTERN CIRCULAR FLANGE TYPE

NLMKP···L

LONG PILOT PATTERN SQUARE FLANGE TYPE

NLMFP···L

LONG PILOT PATTERN CIRCULAR FLANGE TYPE

NLMKP···L

LONG PILOT PATTERN SQUARE FLANGE TYPE

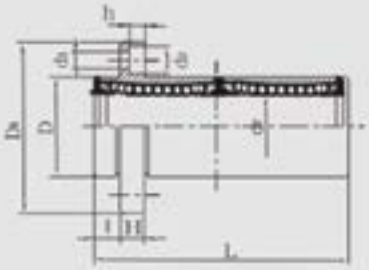

MODEL NO.	MODEL NO.	NUMBER OF BALL ROWS	MAIN DIMENSIONS														SQUARENESS	ECCENTRICITY (MAX.)	BASIC LOAD RATING		WEIGHT (Kg)	
			INSCRIBED CIRCLE DIAMETER		OUTER DIAMETER		LENGTH		l	FLANGE				HOLE FOR ATTACHMENT								
			dr	TOLERANCE	D	TOLERANCE	L	TOLERANCE		D1	K	H	Φ	d1	d2	h			DYNAMIC C0(gf)	STATIC C0(kgf)	F	K
NLMFP6L	NLMKP6L	4	6	0 −0.01	12	0 −0.013	35	0 -0.30	5	28	22	5	20	3.5	6	3.1	0.015	0.015	33	54	0.028	0.024
NLMFP8L	NLMKP8L	4	8		15		45		5	32	25	5	24	3.5	6	3.1			44	80	0.045	0.042
NLMFP10L	NLMKP10L	4	10		19	0 −0.016	55		6	40	30	6	29	4.5	7.5	4.1			60	112	0.080	0.074
NLMFP12L	NLMKP12L	4	12		21		57		6	42	32	6	32	4.5	7.5	4.1			83	160	0.094	0.081
NLMFP13L	NLMKP13L	4	13		23		61		6	43	34	6	33	4.5	7.5	4.1			83	160	0.119	0.104
NLMFP16L	NLMKP16L	5	16		28		70		6	48	37	6	38	4.5	7.5	4.1			126	240	0.184	0.174
NLMFP20L	NLMKP20L	5	20	0 −0.012	32	0 −0.019	80		8	54	42	8	43	5.5	9	5.1	0.020	0.020	143	280	0.246	0.206
NLMFP25L	NLMKP25L	6	25		40		112	0 -0.40	8	62	50	8	51	5.5	9	5.1			159	320	0.500	0.463
NLMFP30L	NLMKP30L	6	30		45		123		10	74	58	10	60	6.6	11	6.1			254	560	0.600	0.550
NLMFP35L	NLMKP35L	6	35	0 −0.015	52	0 −0.022	135		10	82	64	10	67	6.6	11	6.1	0.025	0.025	270	640	0.975	0.871
NLMFP40L	NLMKP40L	6	40		60		151 (154)		13	96	75	13	78	9	14	8.1			350	820	1.500	0.360
NLMFP50L	NLMKP50L	6	50		80		192		13	116	92	13	98	9	14	8.1			620	1622	3.440	3.200
NLMFP60L	NLMKP60L	6	60	0 −0.020	90	0 −0.025	209		18	134	106	18	112	11	17.5	10.8			770	2040	4.380	3.990

NLMFC···L Long centered circular flange type

NLMKC···L Long centered square flange type

Asia Series

NLMFC···L

LONG CENTERED CIRCULAR FLANGE TYPE

NLMKC···L

LONG CENTERED SQUARE FLANGE TYPE

NLMFC···L

LONG CENTERED CIRCULAR FLANGE TYPE

NLMKC···L

LONG CENTERED SQUARE FLANGE TYPE

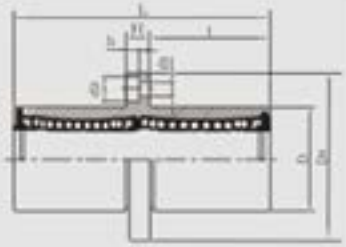

MODEL NO.	MODEL NO.	NUMBER OF BALL ROWS	MAIN DIMENSIONS														SQUAR-ENESS	ECCEN-TRICITY (MAX.)	BASIC LOAD RATING		WEIGHT (Kg)	
			INSCRIBED CIRCLE DIAMETER		OUTER DIAMETER		LENGTH		l	FLANGE				HOLE FOR ATTACHMENT								
			dr	TOLERANCE	D	TOLERANCE	L	TOLERANCE		D1	K	H	Φ	d1	d2	h			DYNAMIC C(kgf)	STATIC Co(kgf)	F	K
NLMFC6L	NLMKC6L	4	6	0 −0.01	12	0 −0.013	35	0 -0.30	15	28	22	5	20	3.5	6	3.1	0.015	0.015	33	54	0.028	0.020
NLMFC8L	NLMKC8L	4	8		15		45		20	32	25	5	24	3.5	6	3.1			44	80	0.053	0.039
NLMFC10L	NLMKC10L	4	10		19	0 −0.016	55		24.5	40	30	6	29	4.5	7.5	4.1			60	112	0.086	0.073
NLMFC12L	NLMKC12L	4	12		21		57		25.5	42	32	6	32	4.5	7.5	4.1			83	160	0.095	0.080
NLMFC13L	NLMKC13L	4	13		23		61		27.5	43	34	6	33	4.5	7.5	4.1			83	160	0.119	0.104
NLMFC16L	NLMKC16L	5	16		28		70		32	48	37	6	38	4.5	7.5	4.1			126	240	0.170	0.168
NLMFC20L	NLMKC20L	5	20	0 −0.012	32	0 −0.019	80		36	54	42	8	43	5.5	9	5.1	0.020	0.020	143	280	0.244	0.205
NLMFC25L	NLMKC25L	6	25		40		112	0 -0.40	52	62	50	8	51	5.5	9	5.1			159	320	0.506	0.470
NLMFC30L	NLMKC30L	6	30		45		123		56.5	74	58	10	60	6.6	11	6.1			254	560	0.670	0.560
NLMFC35L	NLMKC35L	6	35	0 −0.015	52	0 −0.022	135		62.5	82	64	10	67	6.6	11	6.1	0.025	0.025	270	640	0.933	0.800
NLMFC40L	NLMKC40L	6	40		60		151 (154)		69 (70.5)	96	75	13	78	9	14	8.1			350	820	1.495	1.360
NLMFC50L	NLMKC50L	6	50		80		192		89.5	116	92	13	98	9	14	8.1			620	1622	3.440	3.200
NLMFC60L	NLMKC60L	6	60	0 −0.020	90	0 −0.025	209		95.5	134	106	18	112	11	17.5	11.1	0.030	0.030	770	2040	4.380	3.900

NLMT···L Long oval flange type

Asia Series

NLMT···L

LONG OVAL FLANGE TYPE

NLMT6L-NLMT13L

NLMT16L-NLMT40L

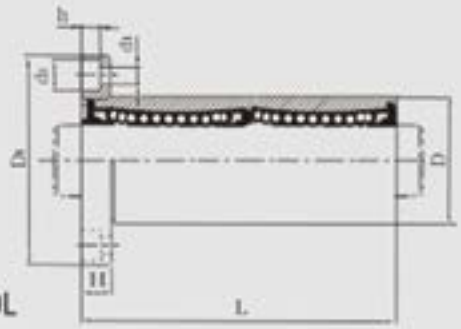

MODEL NO.	NUMBER OF BALL ROWS	MAIN DIMENSIONS														SQUAR-ENESS	ECCEN-TRICITY (MAX.)	BASIC LOAD RATING		WEIGHT (Kg)
		INSCRIBED CIRCLE DIAMETER		OUTER DIAMETER		LENGTH		FLANGE					HOLE FOR ATTACHMENT					DYNAMIC C(kgf)	STATIC Co(kgf)	
		dr	TOLERANCE	D	TOLERANCE	L	TOLERANCE	D1	W	H	A	F	d1	d2	h					
NLMT6L	4	6	0 −0.010	12	0 −0.013	35	0 -0.30	28	18	5	20		3.5	6	3.1	0.015	0.015	33	54	0.025
NLMT8L	4	8		15		45		32	21	5	24		3.5	6	3.1			44	80	0.041
NLMT10L	4	10		19	0 −0.016	55		40	25	6	29		4.5	7.5	4.1			67	112	0.080
NLMT12L	4	12		21		57		42	27	6	32		4.5	7.5	4.1			83	160	0.087
NLMT13L	4	13		23		61		43	29	6	33		4.5	7.5	4.1			83	160	0.107
NLMT16L	5	16		28		70		48	34	6	31	22	4.5	7.5	4.1			125	240	0.171
NLMT20L	5	20	0 −0.012	32	0 −0.019	80		54	38	8	36	24	5.5	9	5.1	0.020	0.020	143	280	0.214
NLMT25L	6	25		40		112	0 -0.40	62	46	8	40	32	5.5	9	5.1			159	320	0.476
NLMT30L	6	30		45		123		74	51	10	49	35	6.6	11	6.1			254	560	0.570
NLMT35L	6	35	0 −0.015	52	0 −0.022	135		82	60	10	55	38	6.6	11	6.1	0.025	0.025	270	640	0.874
NLMT40L	6	40		60		151 (154)		96	70	13	64	45	9	14	8.1			350	820	1.820

NLMTP···L Long pilot pattern oval flange type

Asia Series

NLMTP···L
LONG PILOT PATTERN
OVAL FLANGE TYPE

NLMTP6L-NLMTP13L

NLMTP16L-NLMTP40L

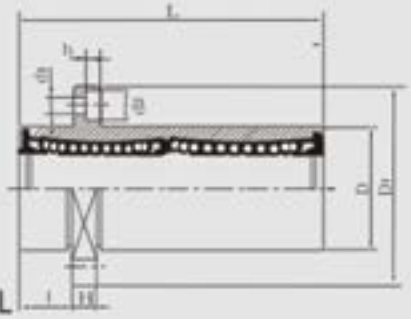

MODEL NO.	NUMBER OF BALL ROWS	MAIN DIMENSIONS															SQUARENESS	ECCENTRICITY (MAX.)	BASIC LOAD RATING		WEIGHT (Kg)
		INSCRIBED CIRCLE DIAMETER		OUTER DIAMETER		LENGTH		l	FLANGE					HOLE FOR ATTACHMENT					DYNAMIC C(kgf)	STATIC Co(kgf)	
		dr	TOLERANCE	D	TOLERANCE	L	TOLERANCE		D1	W	H	A	F	d1	d2	h					
NLMTP6L	4	6	0 -0.010	12	0 -0.013	35	± 0.30	5	28	18	5	20		3.5	6	3.1	0.015	0.015	33	54	0.024
NLMTP8L	4	8		15		45		5	32	21	5	24		3.5	6	3.1			44	80	0.041
NLMTP10L	4	10		19	0 -0.016	55		6	40	25	6	29		4.5	7.5	4.1			60	112	0.077
NLMTP12L	4	12		21		57	0 -0.30	6	42	27	6	32		4.5	7.5	4.1			67	122	0.084
NLMTP13L	4	13		23		61		6	43	29	6	33		4.5	7.5	4.1			83	160	0.144
NLMTP16L	5	16		28		70		6	48	34	6	31	22	4.5	7.5	4.1			125	240	0.171
NLMTP20L	5	20	0 -0.012	32	0 -0.019	80		8	54	38	8	36	24	5.5	9	5.1	0.020	0.020	143	280	0.211
NLMTP25L	6	25		40		112	0 -0.40	8	62	46	8	40	32	5.5	9	5.1			159	320	0.390
NLMTP30L	6	30		45		123		10	74	51	10	49	35	6.6	11	6.1			254	560	0.560
NLMTP35L	6	35	0 -0.015	52	0 -0.022	135		10	82	60	10	55	38	6.6	11	6.1	0.025	0.025	270	640	0.870
NLMTP40L	6	40		60		151 (154)		13	96	70	13	64	45	9	14	8.1			350	820	1.380

NLMTC···L Long centered oval flange type
Asia Series

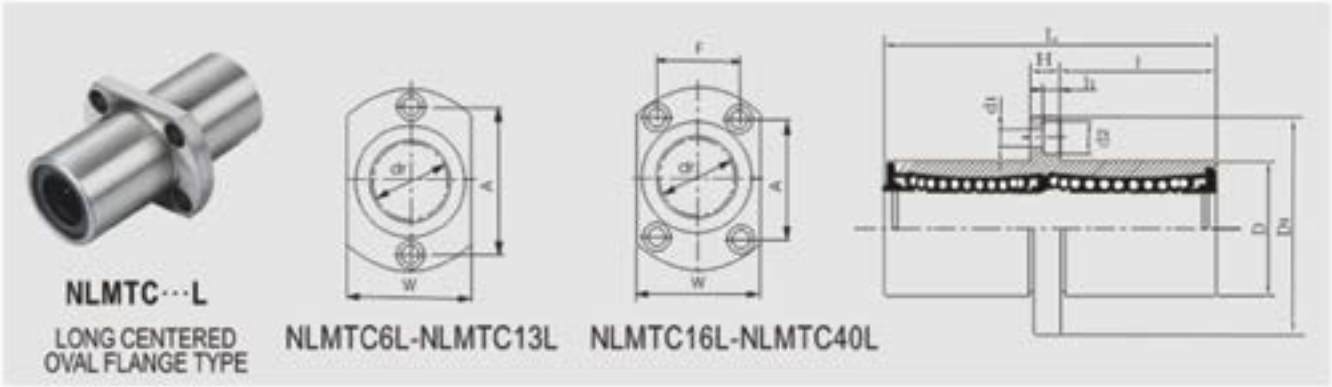

MODEL NO.	NUMBER OF BALL ROWS	MAIN DIMENSIONS															SQUARENESS	ECCENTRICITY (MAX.)	BASIC LOAD RATING		WEIGHT (Kg)
		INSCRIBED CIRCLE DIAMETER		OUTER DIAMETER		LENGTH		l	FLANGE					HOLE FOR ATTACHMENT					DYNAMIC C(kgf)	STATIC Co(kgf)	
		dr	TOLERANCE	D	TOLERANCE	L	TOLERANCE		D1	W	H	A	F	d1	d2	h					
NLMTC6L	4	6	0 -0.010	12	0 -0.013	35	0 -0.30	15	28	18	5	20		3.5	6	3.1	0.015	0.015	33	54	0.040
NLMTC8L	4	8		15		45		20	32	21	5	24		3.5	6	3.1			44	80	0.062
NLMTC10L	4	10		19	0 -0.016	55		24.5	40	25	6	29		4.5	7.5	4.1			60	112	0.114
NLMTC12L	4	12		21		57		25.5	42	27	6	32		4.5	7.5	4.1			67	122	0.124
NLMTC13L	4	13		23		61		27.5	43	29	6	33		4.5	7.5	4.1			83	160	0.144
NLMTC16L	5	16		28		70		32	48	34	6	31	22	4.5	7.5	4.1			125	240	0.170
NLMTC20L	5	20	0 -0.012	32	0 -0.019	80		36	54	38	8	36	24	5.5	9	5.1	0.020	0.020	143	280	0.210
NLMTC25L	6	25		40		112	0 -0.40	52	62	46	8	40	32	5.5	9	5.1			159	320	0.480
NLMTC30L	6	30		45		123		56.5	74	51	10	49	35	6.6	11	6.1			254	560	0.576
NLMTC35L	6	35	0 -0.015	52	0 -0.022	135		62.5	82	60	10	55	38	6.6	11	6.1	0.025	0.025	270	640	0.940
NLMTC40L	6	40		60		151 (154)		69 (70.5)	96	70	13	64	45	9	14	8.1			350	820	1.470

NKBF···L Long circular flange type

NKBK···L Long square flange type

Europe Series

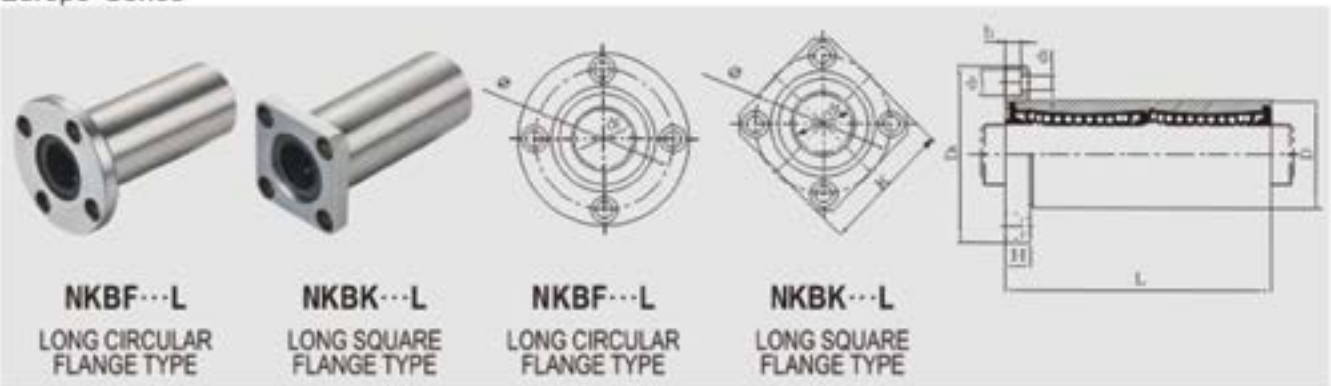

MODEL NO.	MODEL NO.	NUMBER OF BALL ROWS	MAIN DIMENSIONS													SQUARENESS	ECCENTRICITY (MAX.)	BASIC LOAD RATING		WEIGHT (Kg)	
			INSCRIBED CIRCLE DIAMETER		OUTER DIAMETER		LENGTH		FLANGE				HOLE FOR ATTACHMENT								
			dr	TOLERANCE	D	TOLERANCE	L	TOLERANCE	D1	K	H	ϕ	d1	d2	h			DYNAMIC C(kgf)	STATIC Co(kgf)	F	K
NKBF8L	NKBK8L	4	8	+0.009 -0.001	16	0 -0.009	46	0 -0.30	32	25	5	24	3.5	6	3.1	0.015	0.015	43	82	0.052	0.049
NKBF10L	NKBK10L	4	10		19	0 -0.011	55		40	30	6	29	4.5	7.5	4.1			60	112		
NKBF12L	NKBK12L	4	12		22		61		42	32	6	32	4.5	7.5	4.1			83	160	0.117	0.098
NKBF16L	NKBK16L	5	16	+0.011 -0.001	26		68		46	35	6	36	4.5	7.5	4.1			94	182	0.141	0.122
NKBF20L	NKBK20L	5	20		32	0 -0.013	80		54	42	8	43	5.5	9	5.1	0.017	0.017	140	280	0.248	0.215
NKBF25L	NKBK25L	6	25	+0.013 -0.002	40		112	0 -0.40	62	50	8	51	5.5	9	5.1			160	320	0.510	0.500
NKBF30L	NKBK30L	6	30		47		123		76	60	10	62	6.6	11	6.1			225	560	0.782	0.710
NKBF40L	NKBK40L	6	40	+0.016 -0.004	62	0 -0.015	151		98	75	13	80	9	14	8.1	0.02	0.02	350	820	1.700	1.540
NKBF50L	NKBK50L	6	50		75		192		112	88	13	94	9	14	8.1			620	1622	3.479	2.890
NKBF60L	NKBK60L	6	60		90	0 -0.020	209		134	106	18	112	11	17.5	10.8	0.025	0.025	770	2040	4.330	3.920

NKBFC···L Long centered circular flange type

NKBKC···L Long centered square flange type

Europe Series

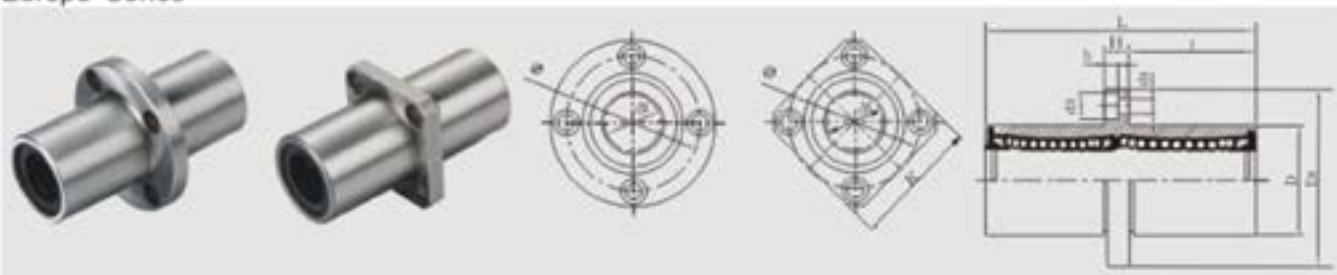

NKBFC···L
LONG CENTERED CIRCULAR FLANGE TYPE

NKBKC···L
LONG CENTERED SQUARE FLANGE TYPE

NKBFC···L
LONG CENTERED CIRCULAR FLANGE TYPE

NKBKC···L
LONG CENTERED SQUARE FLANGE TYPE

MODEL NO.	MODEL NO.	NUMBER OF BALL ROWS	MAIN DIMENSIONS														SQUARENESS	ECCENTRICITY (MAX.)	BASIC LOAD RATING		WEIGHT (Kg)	
			INSCRIBED CIRCLE DIAMETER		OUTER DIAMETER		LENGTH		l	FLANGE				HOLE FOR ATTACHMENT					DYNAMIC C(kgf)	STATIC Co(kgf)	F	K
			dr	TOLERANCE	D	TOLERANCE	L	TOLERANCE		D1	K	H	ϕ	d1	d2	h						
NKBFC8L	NKBKC8L	4	8	+0.009 -0.001	16	0 -0.009	46	±0.30	20.5	32	25	5	24	3.5	6	3.1	0.015	0.015	43	82	0.052	0.049
NKBFC12L	NKBKC12L	4	12		22	0 -0.011	61	0 -0.30	27.5	42	32	6	32	4.5	7.5	4.1			83	160	0.117	0.099
NKBFC16L	NKBKC16L	5	16	+0.011 -0.001	26		68		31	46	35	6	36	4.5	7.5	4.1			94	182	0.146	0.121
NKBFC20L	NKBKC20L	5	20		32	0 -0.013	80		36	54	42	8	43	5.5	9	5.1	0.017	0.017	140	280	0.248	0.207
NKBFC25L	NKBKC25L	6	25	+0.013 -0.002	40		112	0 -0.40	52	62	50	8	51	5.5	9	5.1			160	320	0.570	0.469
NKBFC30L	NKBKC30L	6	30		47		123		56.5	76	60	10	62	6.6	11	6.1			225	560	0.782	0.750
NKBFC40L	NKBKC40L	6	40	+0.016 -0.004	62	0 -0.015	151		69	98	75	13	80	9	14	8.1	0.02	0.02	350	820	1.700	1.515
NKBFC50L	NKBKC50L	6	50		75		192		89.5	112	88	13	94	9	14	8.1			620	1622	3.479	2.490
NKBFC60L	NKBKC60L	6	60		90	0 -0.020	209		95.5	134	106	18	112	11	17.5	10.8	0.025	0.025	770	2040	4.336	3.920

NSWF···L Long circular flange type

NSWK···L Long square flange type

Inch Series

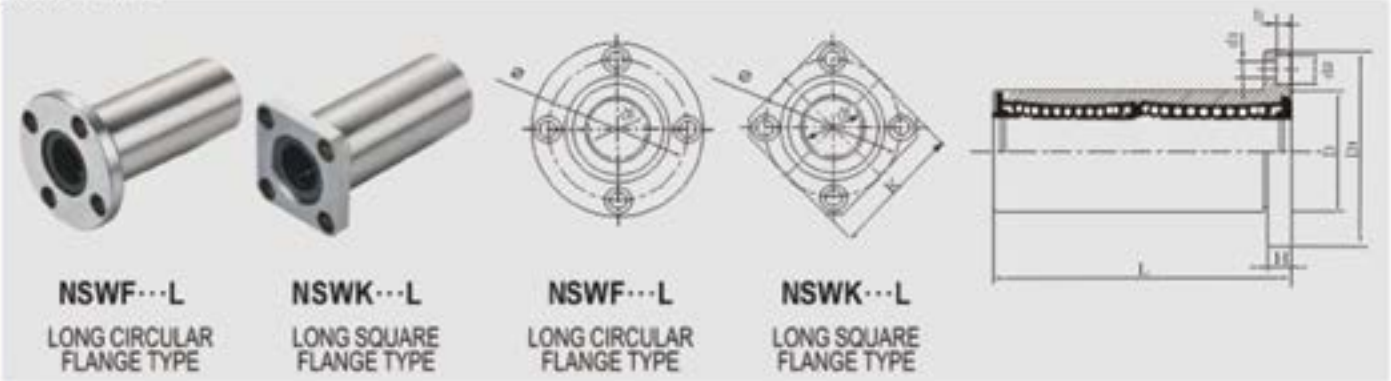

MODEL NO.	NUMBER OF BALL ROWS	MAIN DIMENSIONS													SQUARENESS	ECCENTRICITY (MAX.)	BASIC LOAD RATING		WEIGHT (Kg)	
		INSCRIBED CIRCLE DIAMETER		OUTER DIAMETER		LENGTH		FLANGE				HOLE FOR ATTACHMENT					DYNAMIC C(kgf)	STATIC Co(kgf)	F	K
		dr	TOLERANCE	D	TOLERANCE	L	TOLERANCE	D1	K	H	ϕ	d1	d2	h						
NSWF04L NSWK04L	4	1/4" 6.35	0 -0.010	0.5" 12.7	0 -0.013	1.375" 34.925	± 0.30	1.25" 31.75	1" 25.4	0.219" 5.556	0.875" 22.225	0.156" 3.969	0.25" 6.35	0.141" 3.572	0.015	0.015	33	54	0.08	0.05
NSWF06L NSWK06L	4	3/8" 9.525		0.625" 15.875	0 -0.016	1.5938" 40.481		1.5" 38.1	1.25" 31.75	0.25" 6.35	1.062" 26.988	0.1875" 4.763	0.297" 7.541	0.172" 4.366			36	64	0.09	0.07
NSWF08L NSWK08L	4	1/2" 12.7		0.875" 22.225		2.375" 60.325	0 -0.30	1.75" 44.45	1.375" 34.925	0.25" 6.35	1.312" 33.338	0.1875" 4.763	0.297" 7.541	0.172" 4.366			83	160	0.2	0.15
NSWF10L NSWK10L	4	5/8" 15.875		1.125" 28.575		2.8125" 71.438		2" 50.8	1.5" 38.1	0.25" 6.35	1.562" 39.688	0.1875" 4.763	0.297" 7.541	0.172" 4.366			125	240	0.3	0.25
NSWF12L NSWK12L	4	3/4" 19.05	0 -0.012	1.25" 31.75	0 -0.019	3.0937" 78.581		2.1875" 55.563	1.6875" 42.863	0.3125" 7.938	1.718" 43.66	0.2187" 5.556	0.344" 8.731	0.203" 5.159	0.020	0.020	140	280	0.4	0.35
NSWF16L NSWK16L	6	1" 25.4		1.5625" 39.688		4.2813" 108.744	0 -0.40	2.5" 63.5	2" 50.8	0.3125" 7.938	2.031" 51.594	0.2187" 5.556	0.344" 8.731	0.203" 5.159			160	320	0.7	0.6
NSWF20L NSWK20L	6	1-1/4" 31.75	0 -0.016	2" 50.8	0 -0.022	5" 127		3.125" 79.375	2.5" 63.5	0.375" 9.525	2.5625" 65.088	0.2812" 7.144	0.406" 10.319	0.2656" 6.747	0.025	0.025	225	560	1.25	1.15
NSWF24L NSWK24L	6	1-1/2" 38.1		2.375" 60.325		5.6875" 144.463		3.75" 95.25	3" 76.2	0.5" 12.7	3.0625" 77.788	0.344" 8.731	0.5" 12.7	0.328" 8.334			350	820	2.5	2.0
NSWF32L NSWK32L	6	2" 50.8		3" 76.2	0 -0.025	7.75" 196.85		4.375" 111.125	3.5" 88.9	0.5" 12.7	3.6875" 93.662	0.344" 8.731	0.5" 12.7	0.328" 8.334	0.030	0.030	620	1622	4	3.5

Annotate: NSWF16L steel retainer the number of ball rows is 5, POM retainer the number of ball rows is 6.

NSWFC···L Long centered circular flange type

NSWKC···L Long centered square flange type

Inch Series

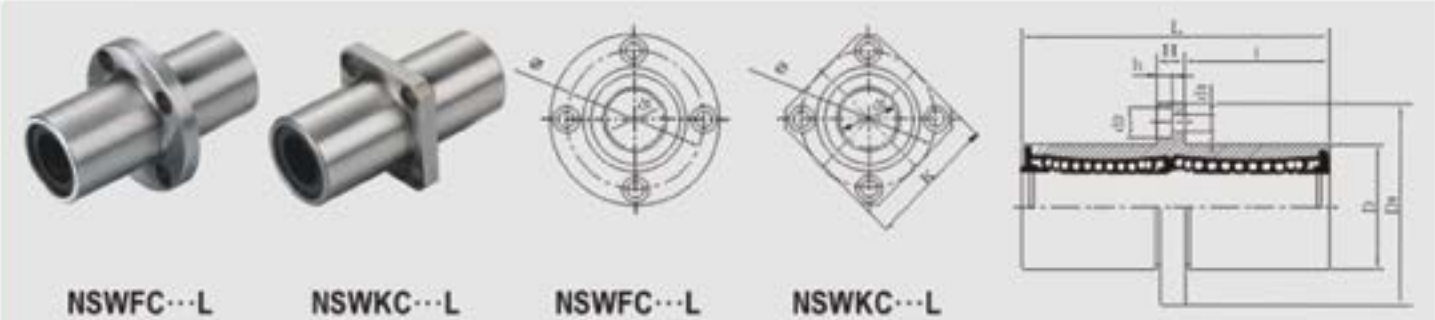

NSWFC···L
LONG CENTERED CIRCULAR FLANGE TYPE

NSWKC···L
LONG CENTERED SQUARE FLANGE TYPE

NSWFC···L
LONG CENTERED CIRCULAR FLANGE TYPE

NSWKC···L
LONG CENTERED SQUARE FLANGE TYPE

MODEL NO.	NUMBER OF BALL ROWS	MAIN DIMENSIONS														SQUARENESS	ECCENTRICITY (MAX.)	BASIC LOAD RATING		WEIGHT (Kg)	
		INSCRIBED CIRCLE DIAMETER		OUTER DIAMETER		LENGTH		l	FLANGE				HOLE FOR ATTACHMENT								
		dr	TOLERANCE	D	TOLERANCE	L	TOLERANCE		D1	K	H	ϕ	d1	d2	h			DYNAMIC C(kgf)	STATIC Co(kgf)	F	K
NSWFC04L NSWKC04L	4	1/4" 6.35	0 -0.01	0.5" 12.7	0 -0.013	1.375" 34.925	± 0.30	0.5781" 14.684	1.25" 31.75	1" 25.4	0.2188" 5.556	0.875" 22.225	0.156" 3.969	0.25" 6.35	0.141" 3.572	0.015	0.015	33	54	0.08	0.05
NSWFC06L NSWKC06L	4	3/8" 9.525		0.625" 15.875	0 -0.016	1.5938" 40.481		0.6719" 17.066	1.5" 38.1	1.25" 31.75	0.25" 6.35	1.062" 26.988	0.1875" 4.763	0.297" 7.541	0.172" 4.366			36	64	0.09	0.07
NSWFC08L NSWKC08L	4	1/2" 12.7		0.875" 22.225		2.375" 60.325	0 -0.30	1.0625" 26.988	1.75" 44.45	1.375" 34.925	0.25" 6.35	1.312" 33.338	0.1875" 4.763	0.297" 7.541	0.172" 4.366			83	160	0.2	0.15
NSWFC10L NSWKC10L	4	5/8" 15.875		1.125" 28.575		2.8125" 71.438		1.2813" 32.544	2" 50.8	1.5" 38.1	0.25" 6.35	1.562" 39.688	0.1875" 4.763	0.297" 7.541	0.172" 4.366			125	240	0.3	0.25
NSWFC12L NSWKC12L	4	3/4" 19.05	0 -0.012	1.25" 31.75	0 -0.019	3.0937" 78.581		1.3906" 35.322	2.1875" 55.563	1.6875" 42.863	0.3125" 7.938	1.718" 43.66	0.2187" 5.556	0.344" 8.731	0.203" 5.159	0.020	0.020	140	280	0.4	0.35
NSWFC16L NSWKC16L	6	1" 25.4		1.5625" 39.688		4.2813" 108.744	0 -0.40	1.9844" 50.403	2.5" 63.5	2" 50.8	0.3125" 7.938	2.031" 51.594	0.2187" 5.556	0.344" 8.731	0.203" 5.159			160	320	0.7	0.6
NSWFC20L NSWKC20L	6	1-1/4" 31.75	0 -0.016	2" 50.8	0 -0.022	5" 127		2.3125" 58.738	3.125" 79.375	2.5" 63.5	0.375" 9.525	2.5625" 65.088	0.2812" 7.144	0.406" 10.319	0.2656" 6.747	0.025	0.025	225	560	1.25	0.15
NSWFC24L NSWKC24L	6	1-1/2" 38.1		2.375" 60.325		5.6875" 144.463		2.5938" 65.882	3.75" 95.25	3" 76.2	0.5" 12.7	3.0625" 77.788	0.344" 8.731	0.5" 12.7	0.328" 8.334			350	820	2.5	2.0
NSWFC32L NSWKC32L	6	2" 50.8		3" 76.2	0 -0.025	7.75" 196.85		3.625" 92.075	4.375" 111.125	3.5" 88.9	0.5" 12.7	3.6875" 93.662	0.344" 8.731	0.5" 12.7	0.328" 8.334	0.030	0.030	620	1622	4	3.5

Annotate: NSWKC16L steel retainer the number of ball rows is 5, POM retainer the number of ball rows is 6.

NLM Series case unit

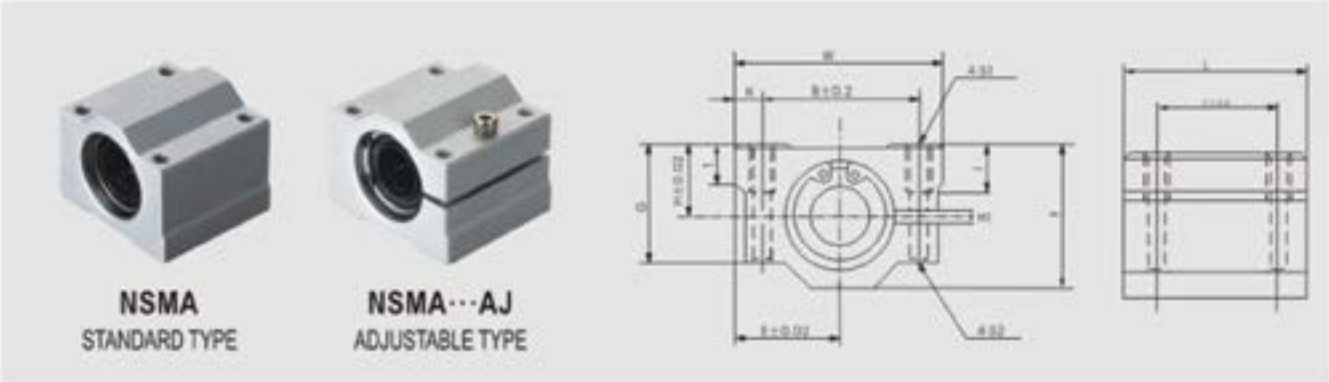

MODEL NO.		SHAFT DIAMETER	MAIN DIMENSIONS							MOUNTING DIMENSION						WEIGHT (Kg)
			H	E	W	L	F	G	H_1	B	C	K	S1	S2	I	
NSMA8	NSMA8AJ	8	11	17	34	30	22	18	1.5	24	18	5	M4	3.4	8	0.052
NSMA10	NSMA10AJ	10	13	20	40	35	26	21	1.5	28	21	6	M5	4.3	12	0.092
NSMA12	NSMA12AJ	12	15	21	42	36	28	24	1.5	30.5	26	5.75	M5	4.3	12	0.102
NSMA13	NSMA13AJ	13	15	22	44	39	30	24.5	1.5	33	26	5.5	M5	4.3	12	0.120
NSMA16	NSMA16AJ	16	19	25	50	44	38.5	32.5	2	36	34	7	M5	4.3	12	0.200
NSMA20	NSMA20AJ	20	21	27	54	50	41	35	2	40	40	7	M6	5.2	12	0.255
NSMA25	NSMA25AJ	25	26	38	76	67	51.5	42	2	54	50	11	M8	7	18	0.600
NSMA30	NSMA30AJ	30	30	39	78	72	59.5	49	2	58	58	10	M8	7	18	0.735
NSMA35	NSMA35AJ	35	34	45	90	80	68	54	2	70	60	10	M8	7	18	1.100
NSMA40	NSMA40AJ	40	40	51	102	90	78	62	2	80	60	11	M10	8.7	25	1.590
NSMA50	NSMA50AJ	50	52	61	122	110	102	80	2	100	80	11	M10	8.7	25	3.340
NSMA60	NSMA60AJ	60	58	66	132	122	114	94	2	108	90	12	M12	10.7	25	4.720

Annotate: NSMA use the LM series bearing
NSMA···AJ use the LM···AJ series bearing

NLM/KB Series case unit

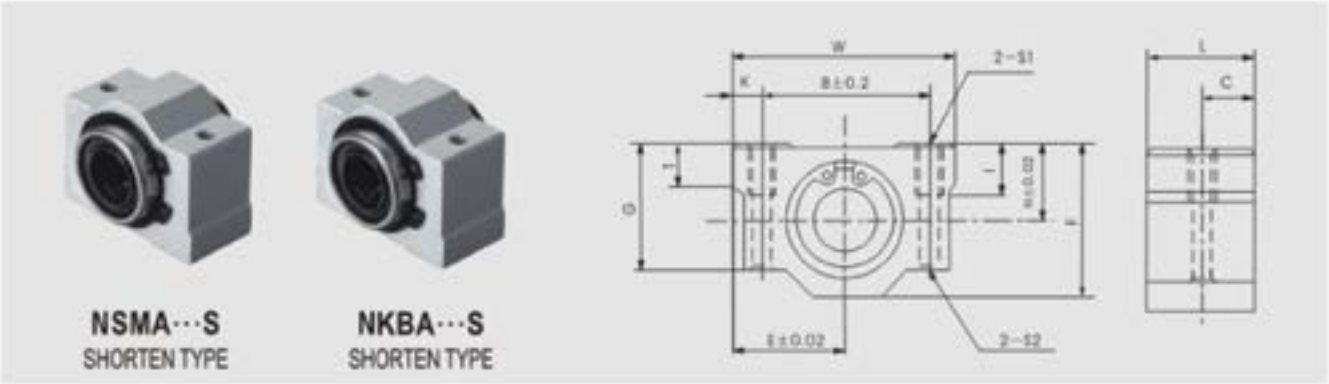

MODEL NO.		SHAFT DIAMETER	MAIN DIMENSIONS								MOUNTING DIMENSION							WEIGHT (Kg)	
			H	E	W	L		F	G	T	B	C		K	S1	S2	I		
						SMAS	KBAS					SMAS	KBAS					SMAS	KBAS
NSMA8S	NKBA8S	8	11	17	34	15.5	14.5	22	18	6	24	7.75	7.25	5	M4	3.4	8	0.027	0.025
NSMA10S	NKBA10S	10	13	20	40	20	20	26	21	8	28	10	10	6	M5	4.3	12	0.053	0.053
NSMA12S		12	15	21	42	21		28	24	8	30.5	10.5		5.75	M5	4.3	12	0.060	
NSMA13S	NKBA12S	13	15	22	44	20.6	20.9	30	24.5	8	33	10.3	10.45	5.5	M5	4.3	12	0.064	0.065
NSMA16S	NKBA16S	16	19	25	50	24.1	22.5	38.5	32.5	9	36	12.05	11.25	7	M5	4.3	12	0.110	0.100
NSMA20S	NKBA20S	20	21	27	54	28.1	29.1	41	35	11	40	14.05	14.55	7	M6	5.2	12	0.144	0.148
NSMA25S	NKBA25S	25	26	38	76	38	41.1	51.5	42	12	54	19	20.55	11	M8	7	18	0.340	0.368
NSMA30S	NKBA30S	30	30	39	78	41.5	49.1	59.5	49	15	58	20.75	24.55	10	M8	7	18	0.424	0.500
NSMA35S		35	34	45	90	45.5		68	54	18	70	22.75		10	M8	7	18	0.626	
NSMA40S	NKBA40S	40	40	51	102	56.5	56.6	78	62	20	80	28.25	28.3	11	M10	8.7	25	1.000	1.000
NSMA50S	NKBA50S	50	52	61	122	69	72.6	102	80	25	100	34.5	36.3	11	M10	8.7	25	2.100	2.205

Annotate: NSMA···S use the LM series bearing
NKBA···S use the KB series bearing

NLM/KB Series case unit

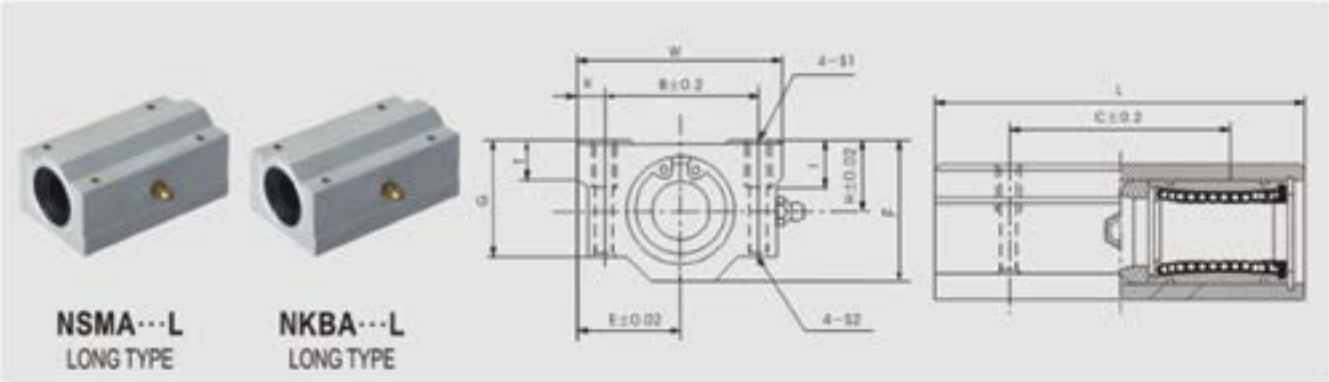

MODEL NO.		SHAFT DIAMETER	MAIN DIMENSIONS								MOUNTING DIMENSION							WEIGHT (Kg)	
			H	E	W	L		F	G	T	B	C		K	S1	S2	I		
						SMAL	KBAL					SMAL	KBAL					SMAL	KBAL
NSMA8L	NKBA8L	8	11	17	34	58	58	22	18	6	24	42	42	5	M4	3.4	8	0.100	0.100
NSMA10L	NKBA10L	10	13	20	40	68	68	26	21	8	28	46	46	6	M5	4.3	12	0.180	0.180
NSMA12L		12	15	21	42	70		28	24	8	30.5	50		5.75	M5	4.3	12	0.200	
NSMA13L	NKBA12L	13(12)	15	22	44	75	77	30	24.5	8	33	50	64	5.5	M5	4.3	12	0.230	0.237
NSMA16L	NKBA16L	16	19	25	50	85	89	38.5	32.5	9	36	60	79	7	M5	4.3	12	0.390	0.405
NSMA20L	NKBA20L	20	21	27	54	96	100	41	35	11	40	70	90	7	M6	5.2	12	0.490	0.510
NSMA25L	NKBA25L	25	26	38	76	130	136	51.5	42	12	54	100	119	11	M8	7	18	1.165	1.220
NSMA30L	NKBA30L	30	30	39	78	140	154	59.5	49	15	58	110	132	10	M8	7	18	1.430	1.580
NSMA35L		35	34	45	90	155		68	54	18	70	120		10	M8	7	18	2.130	
NSMA40L	NKBA40L	40	40	51	102	175	180	78	62	20	80	140	150	11	M10	8.7	25	3.090	3.180
NSMA50L	NKBA50L	50	52	61	122	215	230	102	80	25	100	160	200	11	M10	8.7	25	6.530	6.990

Annotate: NSMA···L use the LM series bearing
NKBA···L use the KB series bearing

NKB Series case unit

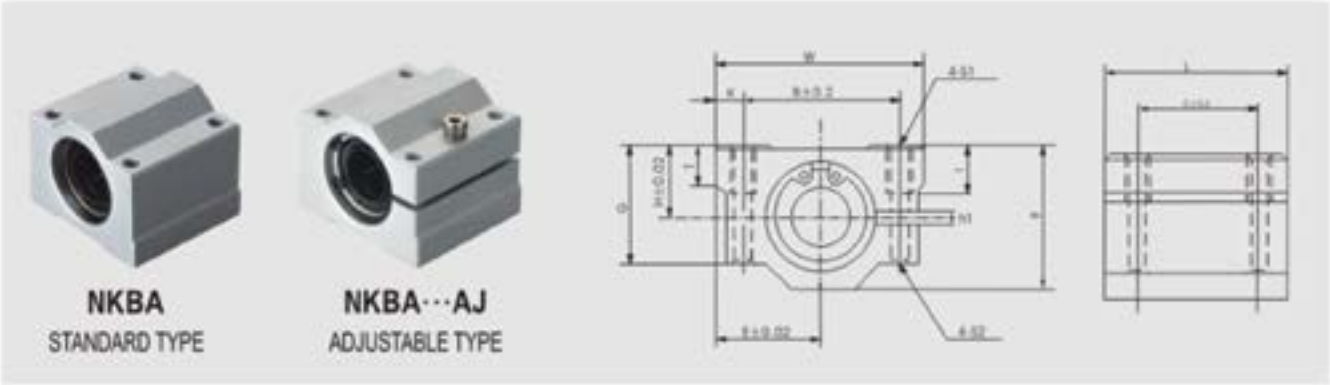

MODEL NO.		SHAFT DIAMETER	MAIN DIMENSIONS								MOUNTING DIMENSION						WEIGHT (Kg)
			H	E	W	L	F	G	h1	T	B	C	K	S1	S2	I	
NKBA8	NKBA8AJ	8	11	17	34	30	22	18	1.5	6	24	18	5	M4	3.4	8	0.052
NKBA10	NKBA10AJ	10	13	20	40	35	26	21	1.5	8	28	21	6	M5	4.3	12	0.092
NKBA12	NKBA12AJ	12	15	22	44	39	30	24.5	1.5	8	33	26	5.5	M5	4.3	12	0.120
NKBA16	NKBA16AJ	16	19	25	50	44	38.5	32.5	2	9	36	34	7	M5	4.3	12	0.200
NKBA20	NKBA20AJ	20	21	27	54	53	41	35	2	11	40	40	7	M6	5.2	12	0.270
NKBA25	NKBA25AJ	25	26	38	76	67	51.5	42	2	12	54	50	11	M8	7	18	0.600
NKBA30	NKBA30AJ	30	30	39	78	76	59.5	49	2	15	58	58	10	M8	7	18	0.776
NKBA40	NKBA40AJ	40	40	51	102	90	78	62	2	20	80	60	11	M10	8.7	25	1.590
NKBA50	NKBA50AJ	50	52	61	122	110	102	80	2	25	100	80	11	M10	8.7	25	3.340
NKBA60	NKBA60AJ	60	58	66	132	137	114	94	2	30	108	90	12	M12	10.7	25	4.800

Annotate:NKBA use the KB series bearing
NKBA···AJ use the KB···AJ series bearing

NLM series (or KB series) adjustment and open case unit

NTBR

ADJUSTMENT AND OPEN TYPE

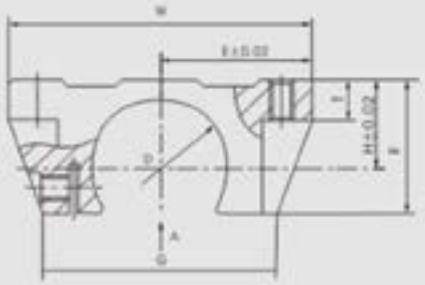

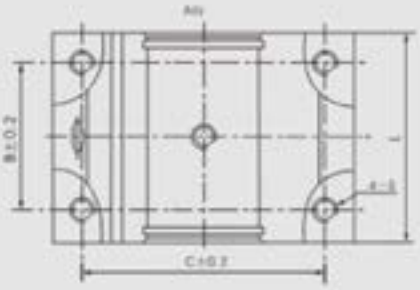

MODEL NO.	D	H	E	T	F	G	W	B	C	L	S	WEIGHT (Kg)
NTBR16	28	17.86	31	8	27	48	62	30	50	42	M5	0.18
NTBR20	32	20.99	34	10	31.4	52.4	68	37	54	51	M6	0.30
NTBR25	40	28.0	41	12	41	61	82	50	65	65	M8	0.60
NTBR30	45	33.48	45.5	12	48	65	91	60	75	75	M8	0.90

Annotate: NTBR use the LM series bearing

NLM/KB Series open case unit

NSME
STANDARD TYPE

NKBE
STANDARD TYPE

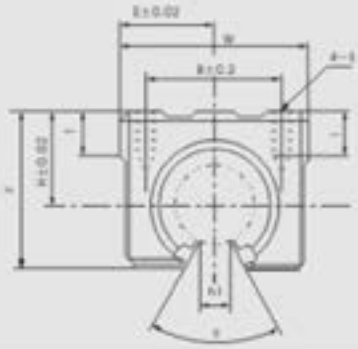

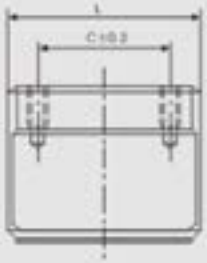

MODEL NO.		SHAFT DIAMETER	MAIN DIMENSIONS									MOUNTING DIMENSION				BASIC LOAD RATING		WEIGHT (Kg)
			H	E	W	L	F	T	h1	θ SME	θ KBE	B	C	S	I	DYNAMIC C(kgf)	STATIC Co(kgf)	
NSME10	NKBE10	10	15	18	36	32	24	7	6	80°	80°	25	20	M5	10	38	56	0.065
NSME12	NKBE12	12	17	20	40	39	27.6	8	8.5	80°	80°	28	26	M5	10	42(52)	61(79)	0.100
NSME13		13	17	20	40	39	27.6	8	8.5	80°		28	26	M5	10	52	80	0.100
NSME16	NKBE16	16	20	22.5	45	45	33	9	10	80°	80°	32	30	M5	12	59	91	0.150
NSME20	NKBE20	20	23	24	48	50	39	11	10	60°	60°	35	35	M6	12	88	140	0.200
NSME25	NKBE25	25	27	30	60	65	47	14	11.5	50°	60°	40	40	M6	12	100	160	0.450
NSME30	NKBE30	30	33	35	70	70	56	15	14	50°	60°	50	50	M8	18	160	280	0.630
NSME35		35	37	40	80	80	63	18	16	50°		55	55	M8	18	170	320	0.920
NSME40	NKBE40	40	42	45	90	90	72	20	19	50°	60°	65	65	M10	20	220	410	1.330
NSME50	NKBE50	50	53	60	120	110	92	25	23	50°	60°	94	80	M10	20	390	810	3.000

Annotate: NSME use the LM···OP series bearing
NKBE···AJ use the KB···OP series bearing

NLM Series long type open case unit

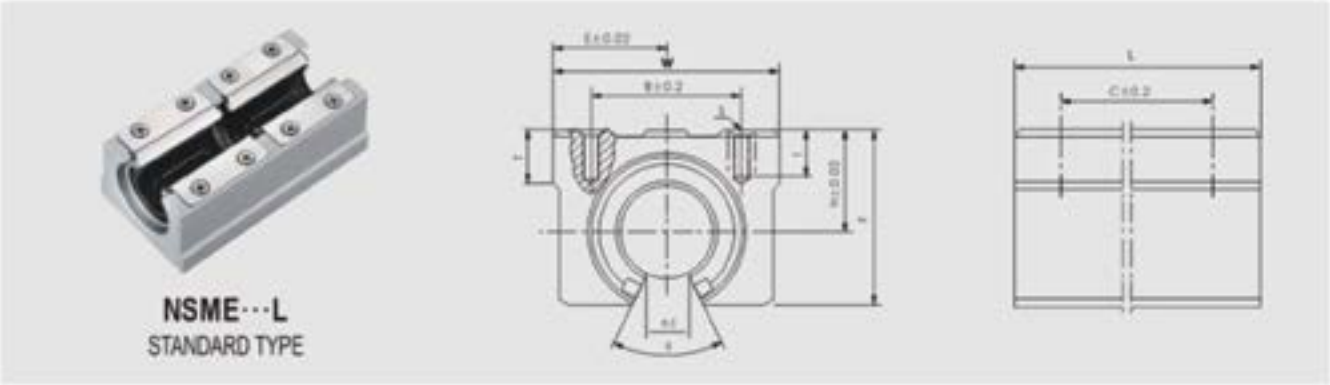

MODEL NO.	SHAFT DIAMETER	MAIN DIMENSIONS								MOUNTING DIMENSION				WEIGHT (Kg)
		H	E	W	L	F	T	h1	θ	B	C	S	I	
NSME12L	12	17	20	40	75	27.6	8	8.5	80°	28	50	M5	12	0.20
NSME13L	13	17	20	40	75	27.6	8	8.5	80°	28	50	M5	12	0.20
NSME16L	16	20	22.5	45	85	33	9	10	80°	32	60	M5	12	0.29
NSME20L	20	23	24	48	96	39	11	10	60°	35	70	M6	12	0.51
NSME25L	25	27	30	60	130	47	14	11.5	50°	40	100	M6	12	0.98
NSME30L	30	33	35	70	140	56	15	14	50°	50	110	M8	18	1.45
NSME35L	35	37	40	80	155	63	18	16	50°	55	120	M8	18	1.80
NSME40L	40	42	45	90	175	72	20	19	50°	65	140	M10	20	2.48

Annotate: NSME···L use two pieces of LM···OP series bearing

NKB Series case unit

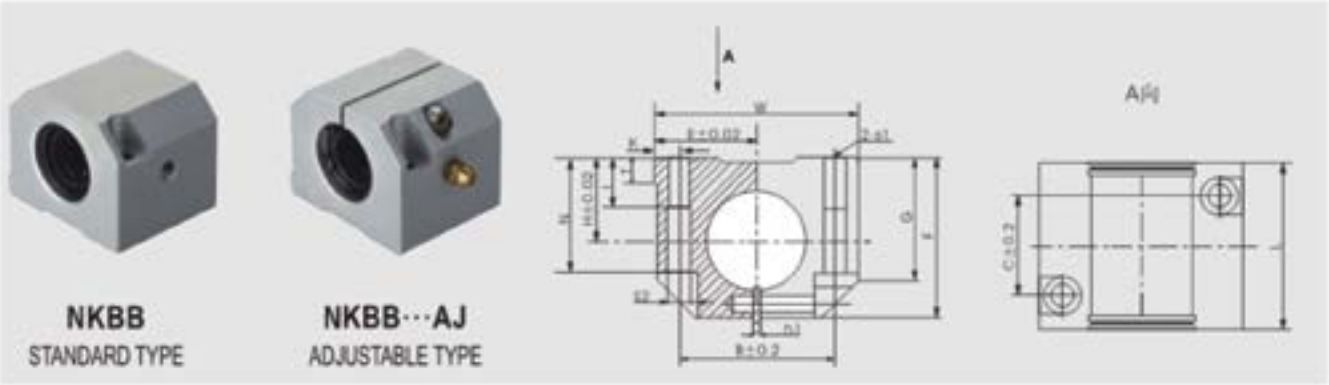

MODEL NO.		SHAFT DIAMETER	MAIN DIMENSIONS									MOUNTING DIMENSION						WEIGHT (Kg)
			H	E	W	L	F	G	T	N	h1	B	C	S1	S2	I	K	
NKBB16	NKBB16AJ	16	22	26.5	53	43	42	32	7	30	1.5	40	26	M6	5.3	13	6.5	0.19
NKBB20	NKBB20AJ	20	25	30	60	54	50	39	7.5	34	2	45	32	M8	6.6	18	7.5	0.31
NKBB25	NKBB25AJ	25	30	39	78	67	60	48	8.5	40	2	60	40	M10	8.4	22	9	0.86
NKBB30	NKBB30AJ	30	35	43.5	87	79	70	57	9.5	48	2	68	45	M10	8.4	22	9.5	0.91
NKBB40	NKBB40AJ	40	45	54	108	91	90	60	10.5	60	3	86	58	M12	10.1	26	11	2.05

Annotate: NKBB use the KB series bearing
NKBB···AJ use the KB···AJ series bearing

NKB Series open case unit

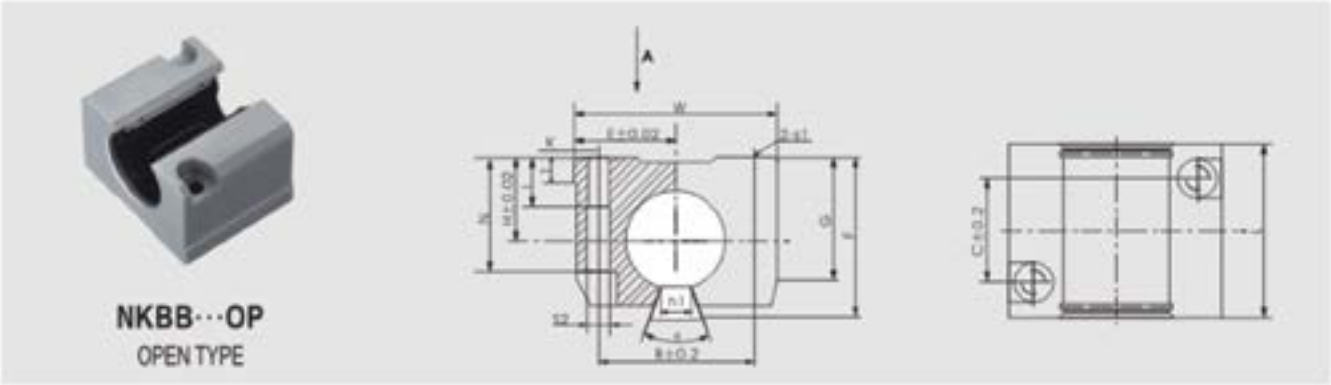

MODEL NO.	SHAFT DIAMETER	MAIN DIMENSIONS										MOUNTING DIMENSION						WEIGHT (Kg)
		H	E	W	L	F	G	T	h1	N	θ	B	C	S1	S2	I	K	
NKBB16 OP	16	22	26.5	53	43	35	32	7	17.7	27	78°	40	26	M6	5.3	13	6.5	0.18
NKBB20 OP	20	25	30	60	54	42	39	7.5	17.7	32	60°	45	32	M8	6.6	18	7.5	0.30
NKBB25 OP	25	30	39	78	67	51	48	8.5	21.7	39	60°	60	40	M10	8.4	22	9	0.84
NKBB30 OP	30	35	43.5	87	79	60	57	9.5	21.5	48	50°	68	45	M10	8.4	22	9.5	0.89
NKBB40 OP	40	45	54	108	91	77	60	10.5	29	60	60°	86	58	M12	10.1	26	11	1.74

Annotate: NKBB···OP use the KB···OP series bearing

NKB Series case unit

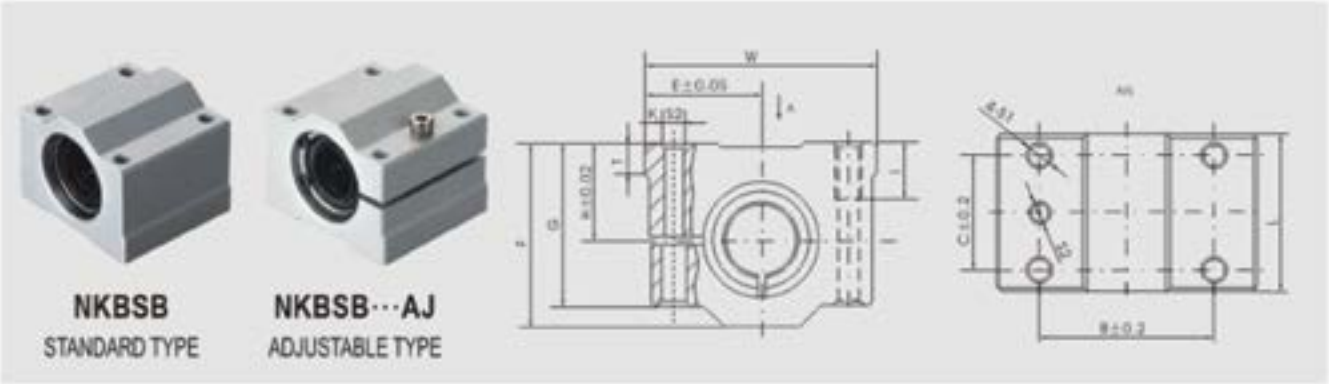

MODEL NO.		SHAFT DIAMETER	MAIN DIMENSIONS							MOUNTING DIMENSION						WEIGHT (Kg)
			H	E	W	L	F	G	T	B	C	K	S1	S2	I	
NKBSB12	NKBSB12AJ	12	18	21.5	43	32	35	31	6	32	23	5.5	M5	M4	11	0.095
NKBSB16	NKBSB16AJ	16	22	26.5	53	36	42	37	7	40	26	6.5	M6	M5	13	0.161
NKBSB20	NKBSB20AJ	20	25	30	60	45	50	44	7.5	45	32	7.5	M8	M6	18	0.262
NKBSB25	NKBSB25AJ	25	30	39	78	58	60	52.5	8.5	60	40	9	M10	M8	22	0.487
NKBSB30	NKBSB30AJ	30	35	43.5	87	68	70	62	9.5	68	45	9.5	M10	M8	22	0.726
NKBSB40	NKBSB40AJ	40	45	54	108	80	90	80	11	86	58	12	M12	M10	26	1.276

Annotate: NKBSB use the KB series bearing
NKBSB···AJ use the KB···AJ series bearing

NSSWA Case unit

Inch series

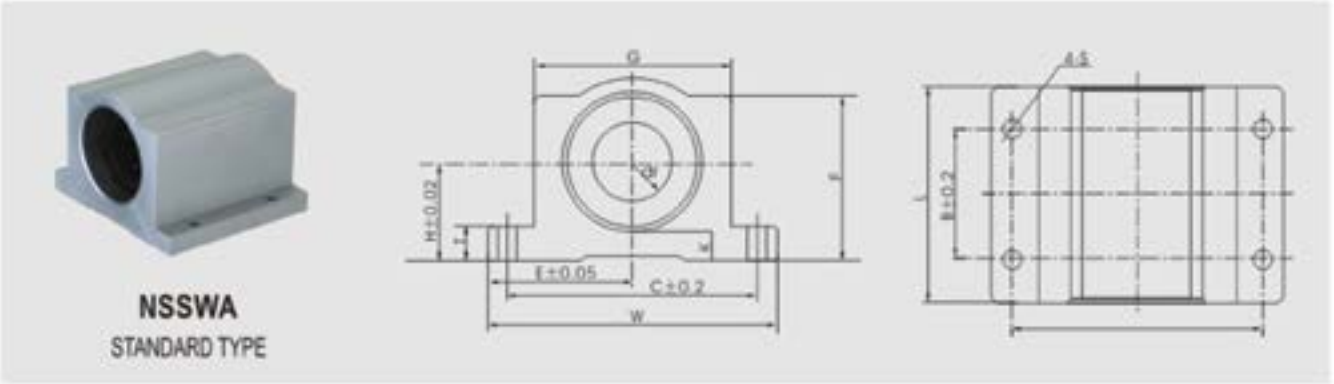

MODEL NO.	SHAFT DIAMETER	MAIN DIMENSIONS						MOUNTING DIMENSION					BASIC LOAD RATING		WEIGHT (Lbs)
		H	E	W	L	F	T	G	K	B	C	S1	DYNAMIC C(kgf)	STATIC Co(kgf)	
NSSWA08	0.500	0.687	1.000	2.000	1.688	1.125	0.250	1.375	0.250	1.000	1.688	0.155	104	132	1.2
NSSWA10	0.625	0.875	1.250	2.500	1.937	1.437	0.281	1.750	0.313	1.125	2.125	0.185	182	228	1.5
NSSWA12	0.750	0.937	1.375	2.750	2.063	1.562	0.312	1.875	0.312	1.250	2.375	0.185	213	268	1.6
NSSWA16	1.000	1.187	1.625	3.250	2.813	1.937	0.375	2.375	0.406	1.750	2.875	0.217	386	481	2.2
NSSWA20	1.250	1.500	2.000	4.000	3.625	2.500	0.437	3.000	0.500	2.000	3.500	0.217	558	695	3.5
NSSWA24	1.500	1.750	2.375	4.750	4.000	2.937	0.500	3.500	0.563	2.500	4.125	0.280	672	840	4.8
NSSWA32	2.000	2.125	3.000	6.000	5.000	3.625	0.625	4.500	0.625	3.250	5.250	0.406	1102	1377	8

Annotate: NSSWA use the SSW series bearing
1 Lbs=0.454kg

NSSWA Long type case unit
Inch Series

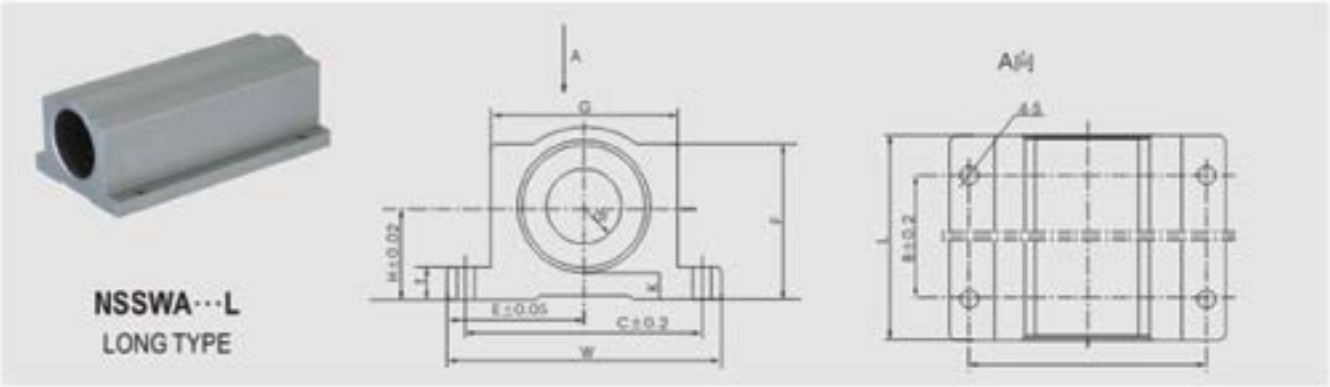

MODEL NO.	SHAFT DIAMETER	MAIN DIMENSIONS						MOUNTING DIMENSION					BASIC LOAD RATING		WEIGHT (Lbs)
		H	E	W	L	F	T	G	K	B	C	S1	DYNAMIC C(kgf)	STATIC Co(kgf)	
NSSWA08L	0.500	0.687	1.000	2.000	1.688	1.125	0.250	1.375	0.250	2.500	1.688	0.155	167	264	0.4
NSSWA10L	0.625	0.875	1.250	2.500	1.937	1.437	0.281	1.750	0.313	3.000	2.125	0.185	290	454	1
NSSWA12L	0.750	0.937	1.375	2.750	2.063	1.562	0.312	1.875	0.312	3.500	2.375	0.185	340	535	1.2
NSSWA16L	1.000	1.187	1.625	3.250	2.813	1.937	0.375	2.375	0.406	4.500	2.875	0.217	617	962	2.4
NSSWA20L	1.250	1.500	2.000	4.000	3.625	2.500	0.437	3.000	0.500	5.500	3.500	0.217	894	1388	5
NSSWA24L	1.500	1.750	2.375	4.750	4.000	2.937	0.500	3.500	0.563	6.500	4.125	0.280	1077	1679	7.8
NSSWA32L	2.000	2.125	3.000	6.000	5.000	3.625	0.625	4.500	0.625	8.250	5.250	0.406	1131	1893	14.5

Annotate: NSSWA···L use two pieces of SSW series bearing
1 Lbs=0.454kg

NSWB Case unit
Inch Series

NSWB
STANDARD TYPE

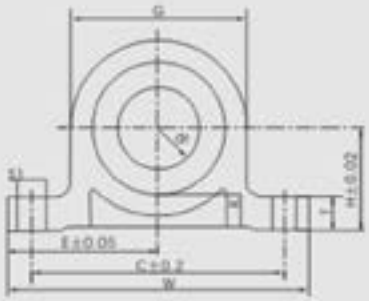

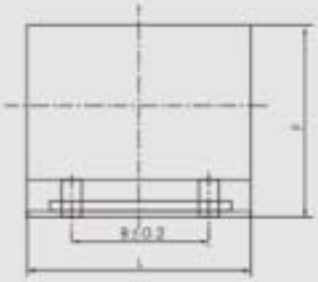

MODEL NO.	SHAFT DIAMETER	MAIN DIMENSIONS						MOUNTING DIMENSION					WEIGHT (Lbs)
		H	E	W	L	F	T	G	K	B	C	S1	
NSWB08	0.500	0.687	1.000	2.000	1.688	1.252	0.257	1.130	0.250	1.000	1.688	0.155	0.058
NSWB12	0.750	0.937	1.375	2.750	2.063	1.749	0.312	1.624	0.312	1.250	2.375	0.187	0.136
NSWB16	1.000	1.187	1.625	3.250	2.813	2.187	0.375	2.000	0.406	1.750	2.875	0.219	0.264
NSWB20	1.250	1.500	2.000	4.000	3.625	2.843	0.468	2.624	0.500	2.000	3.500	0.219	0.585
NSWB24	1.500	1.750	2.375	4.750	4.000	3.250	0.501	3.000	0.563	2.500	4.125	0.282	0.765
NSWB32	2.000	2.125	30.000	6.000	5.000	4.062	0.625	3.874	62.520	3.250	5.250	0.407	1.578

Annotate:NSWB use the SSW series bearing

NSWB Long type case unit
Inch series

NSWB···L
LONG TYPE

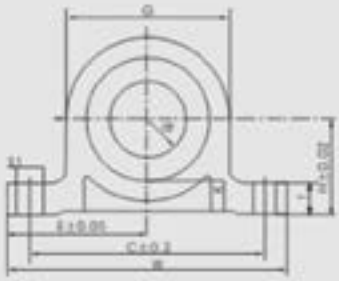

MODEL NO.	SHAFT DIAMETER	MAIN DIMENSIONS						MOUNTING DIMENSION					WEIGHT (Lbs)
		H	E	W	L	F	T	G	K	B	C	S1	
NSWB08L	0.500	0.687	1.000	2.000	3.500	1.252	0.257	1.130	0.250	1.000	1.688	0.156	0.116
NSWB12L	0.750	0.937	1.375	2.750	4.500	1.749	31.220	1.624	0.312	1.250	2.375	0.187	0.292
NSWB16L	1.000	1.187	1.625	3.250	6.000	2.187	0.375	2.000	0.406	1.750	2.875	0.219	0.57
NSWB20L	1.250	1.500	2.000	4.000	7.500	2.843	0.468	2.624	0.500	2.000	3.500	0.219	1.155
NSWB24L	1.500	1.750	2.375	4.750	9.000	3.250	0.501	3.000	0.563	2.500	4.125	0.282	1.688

Annotate: NSWB···L use two pieces of SSW series bearing

NSWB Open type case unit
Inch series

NSWB···OP
OPEN TYPE

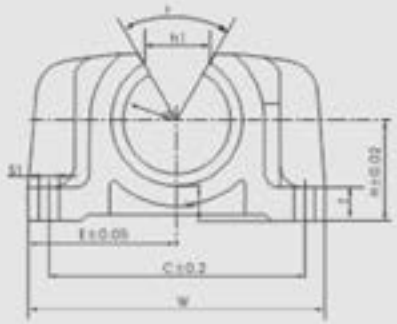

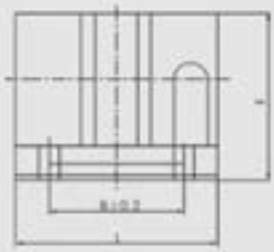

MODEL NO.	SHAFT DIAMETER	MAIN DIMENSIONS									MOUNTING DIMENSION			WEIGHT (Kg)
		H	E	W	L	F	θ	T	h1	K	B	C	S1	
NSWB08OP	0.500	0.687	1.043	2.087	1.500	1.130	60°	0.257	0.419	0.250	1.000	1.688	0.156	0.06
NSWB12OP	0.750	0.937	1.375	2.750	1.874	1.563	60°	0.310	0.625	0.312	1.250	2.375	0.187	0.135
NSWB16OP	1.000	1.187	1.625	3.250	2.625	2.000	60°	0.375	0.760	0.406	1.750	2.875	0.219	0.268
NSWB20OP	1.250	1.500	2.000	4.000	3.375	2.500	60°	0.468	0.953	0.500	2.000	3.500	0.219	0.536
NSWB24OP	1.500	1.750	2.375	4.750	3.750	2.937	60°	0.500	1.161	0.563	2.500	4.125	0.282	0.794
NSWB32OP	2.000	2.125	3.000	6.000	4.750	3.625	60°	0.622	1.469	0.625	3.250	5.250	0.407	1.35

Annotate: NSWB···OP use the SSW···OP series bearing

NSWB Long open type case unit
Inch Series

NSWB···L–OP
LONG OPEN TYPE

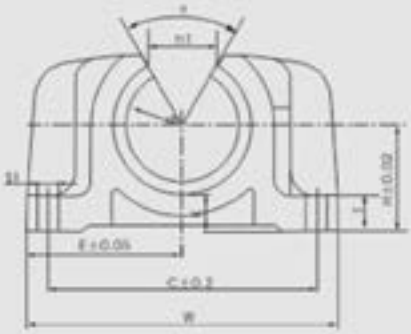

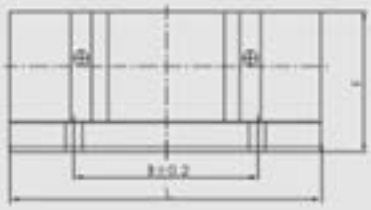

MODEL NO.	SHAFT DIAMETER	MAIN DIMENSIONS									MOUNTING DIMENSION			WEIGHT (Kg)
		H	E	W	L	F	θ	T	h1	K	B	C	S1	
NSWB08LOP	0.500	0.687	1.043	2.087	3.500	1.130	60°	0.257	0.419	0.250	2.500	1.688	0.156	0.123
NSWB12LOP	0.750	0.937	1.375	2.750	4.500	1.563	60°	0.310	0.625	0.312	3.500	2.375	0.187	0.305
NSWB16LOP	1.000	1.187	1.625	3.250	6.000	2.000	60°	0.375	0.760	0.406	4.500	2.875	0.219	0.612
NSWB20LOP	1.250	1.500	2.000	4.000	7.500	2.500	60°	0.468	0.953	0.500	5.500	3.500	0.219	1.128
NSWB24LOP	1.500	1.750	2.375	4.750	9.000	2.937	60°	0.500	1.161	0.563	6.500	4.125	0.282	1.778

Annotate: NSWB···L–OP use the SSW···OP series bearing

NSWD Adjustment and open case unit
Inch Series

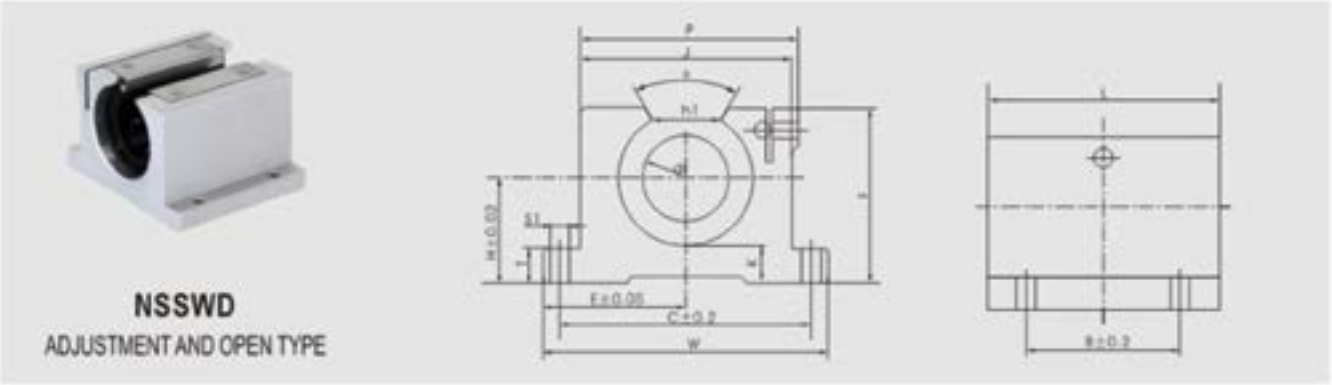

MODEL NO.	SHAFT DIAMETER	MAIN DIMENSIONS								MOUNTING DIMENSION						BASIC LOAD RATING		WEIGHT (Lbs)
		H	E	W	L	F	θ	T	h1	K	J	P	B	C	S1	DYNAMIC C(kgf)	STATIC Co(kgf)	
NSSWD08	0.500	0.687	1.043	2.087	1.500	1.122	60°	0.257	0.419	0.250	1.407	1.437	1.000	1.688	0.156	104	132	0.188
NSSWD10	0.625	0.875	1.250	2.500	1.750	1.438	60°	0.280	0.531	0.313	1.752	1.813	1.125	2.125	0.187	182	228	0.365
NSSWD12	0.750	0.937	1.375	2.750	1.874	1.563	60°	0.310	0.625	0.312	1.906	1.968	1.250	2.375	0.187	213	268	0.452
NSSWD16	1.000	1.187	1.625	3.250	2.625	2.000	60°	0.380	0.760	0.406	2.406	2.468	1.750	2.875	0.218	386	481	1.01
NSSWD20	1.250	1.500	2.000	4.000	3.375	2.500	60°	0.437	0.953	0.500	3.00	3.094	2.000	3.500	0.218	558	695	1.98
NSSWD24	1.500	1.750	2.375	4.750	3.750	2.937	60°	0.500	1.187	0.563	3.500	3.562	2.500	4.125	0.281	672	840	2.95
NSSWD32	2.000	2.125	3.000	6.000	4.750	3.620	60°	0.625	1.493	0.625	4.488	4.685	3.250	5.250	0.406	1102	1377	5.84

Annotate: NSSWD use the SSW···OP series bearing
1 Lbs=0.454kg

NSWD Long adjustment and open case unit
Inch Series

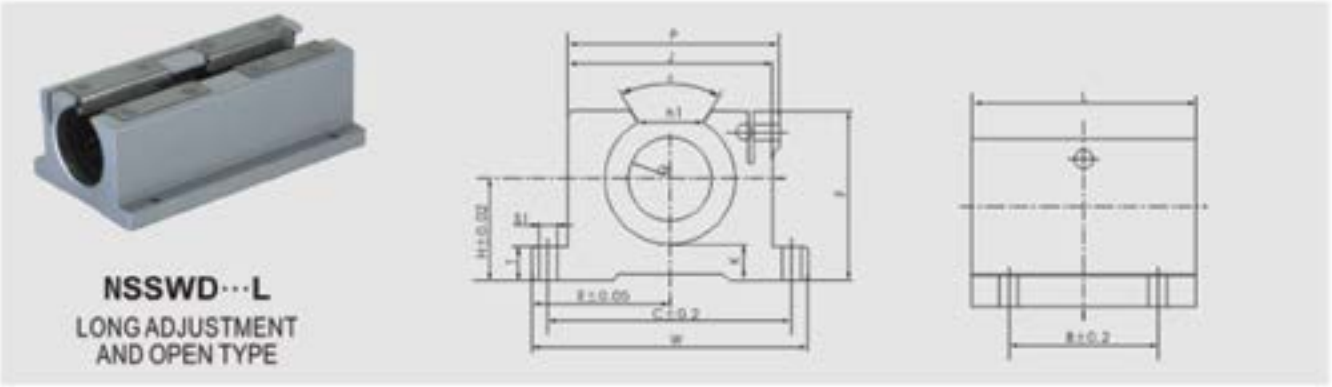

MODEL NO.	SHAFT DIAMETER	MAIN DIMENSIONS								MOUNTING DIMENSION						BASIC LOAD RATING		WEIGHT (Lbs)
		H	E	W	L	F	θ	T	h1	K	J	P	B	C	S1	DYNAMIC C(kgf)	STATIC Co(kgf)	
NSSWD08L	0.500	0.687	1.043	2.087	3.500	1.122	60°	0.257	0.419	0.250	1.407	1.437	2.500	1.688	0.156	167	264	0.4
NSSWD10L	0.625	0.875	1.250	2.500	4.000	1.438	60°	0.280	0.531	0.313	1.752	1.813	3.000	2.125	0.187	290	454	0. 8
NSSWD12L	0.750	0.937	1.375	2.750	4.500	1.563	60°	0.310	0.625	0.312	1.906	1.968	3.500	2.493	0.187	340	535	1
NSSWD16L	1.000	1.187	1.625	3.250	6.000	2.000	60°	0.380	0.760	0.406	2.406	2.468	4.500	2.875	0.218	617	962	2
NSSWD20L	1.250	1.500	2.000	4.000	7.500	2.500	60°	0.437	0.953	0.500	3.00	3.094	5.500	3.500	0.218	894	1388	4. 2
NSSWD24L	1.500	1.750	2.375	4.750	9.000	2.937	60°	0.500	1.187	0.563	3.500	3.562	6.500	4.125	0.281	1077	1679	6. 7
NSSWD32L	2.000	2.125	3.000	6.000	1.000	3.620	60°	0.625	1.493	0.625	4.488	4.685	8.250	5.250	0.406	1131	1893	12. 2

Annotate: NSSWD···L use two pieces of SSW···OP series bearing
1 Lbs=0.454kg

NSK Stand–up shaft support

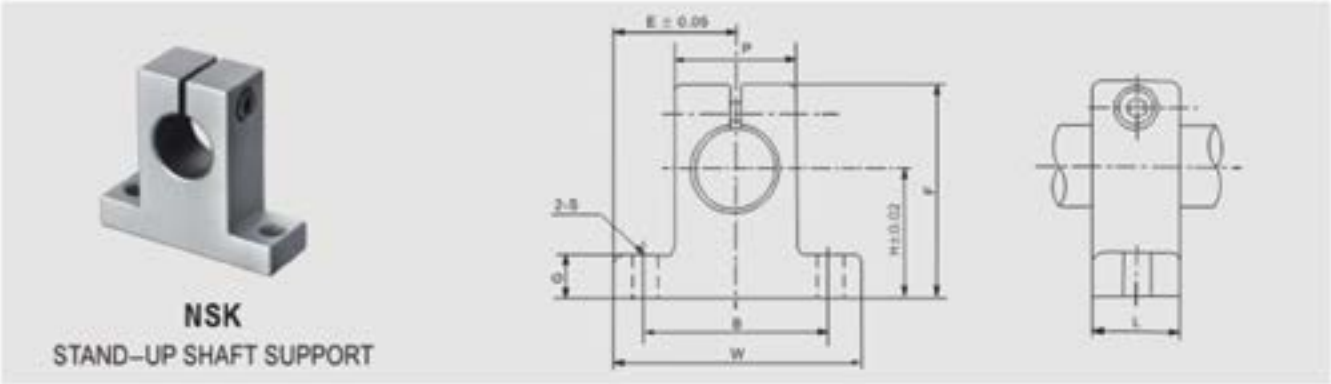

NSK
STAND–UP SHAFT SUPPORT

MODEL NO.	SHAFT DIAMETER	MAIN DIMENSIONS									DESIGNATION OF CLAMPING BOLT	DESIGNATION OF MOUNTING BOLT	WEIGHT (Kg)
		H	E	W	L	F	G	P	B	S			
NSK3	3	20	21	42	14	33	6	18	32	5.5	M4	M5	0.024
NSK4	4	20	21	42	14	33	6	18	32	5.5	M4	M5	0.024
NSK5	5	20	21	42	14	33	6	18	32	5.5	M4	M5	0.024
NSK6	6	20	21	42	14	33	6	18	32	5.5	M4	M5	0.024
NSK8	8	20	21	42	14	33	6	18	32	5.5	M4	M5	0.024
NSK10	10	20	21	42	14	33	6	18	32	5.5	M4	M5	0.024
NSK12	12	23	21	42	14	37.5	6	20	32	5.5	M4	M5	0.030
NSK13	13	23	21	42	14	37.5	6	20	32	5.5	M4	M5	0.030
NSK16	16	27	24	48	16	44	8	25	38	5.5	M4	M5	0.040
NSK20	20	31	30	60	20	51	10	30	45	6.6	M5	M6	0.070
NSK25	25	35	35	70	24	60	12	38	56	6.6	M6	M6	0.130
NSK30	30	42	42	84	28	70	12	44	64	9	M6	M8	0.180
NSK35	35	50	49	98	32	82	15	50	74	11	M8	M10	0.270
NSK40	40	60	57	114	36	96	15	60	90	11	M8	M10	0.420
NSK50	50	70	63	126	40	120	18	74	100	14	M12	M12	0.750

NPA Stand-up shaft support

NPA
STAND-UP SHAFT SUPPORT

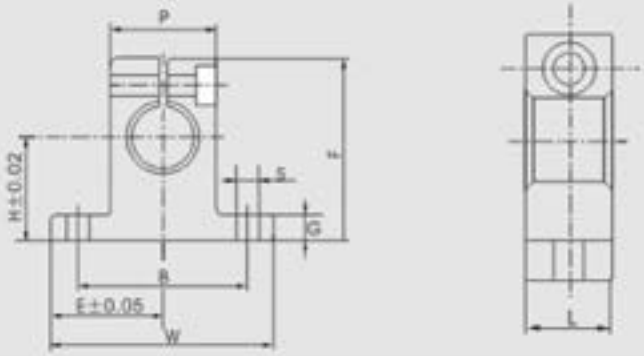

MODEL NO.	SHAFT DIAMETER	MAIN DIMENSIONS									WEIGHT (Kg)
		H	E	W	L	F	G	P	B	S	
NPA12	12	20	21	42	12	35	5.5	20	32	4.3	0.021
NPA16	16	25	25	50	16	42	6.5	26	40	4.3	0.040
NPA20	20	30	30	60	20	50	8	32	45	4.3	0.075
NPA25	25	35	37	74	25	58	9	38	60	5.3	0.130
NPA30	30	40	42	84	28	68	10	45	68	6.4	0.195
NPA40	40	50	54	108	32	86	12	56	86	8.4	0.380

NSK Stand-up shaft support
Inch Series

NSKW
STAND-UP SHAFT SUPPORT

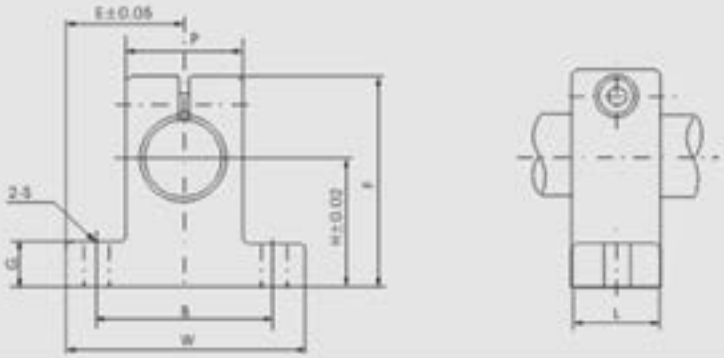

MODEL NO.	SHAFT DIAMETER	MAIN DIMENSIONS									WEIGHT (Kg)
		H	E	W	L	F	G	P	B	S	
NSKW04	0.25"	0.6875"	0.75	1.50"	0.50"	1.063"	0.25"	0.50"	1.125"	0.156"	0.015
NSKW06	0.375"	0.75"	0.8125"	1.625"	0.563"	1.187"	0.25"	0.688"	1.25"	0.156"	0.021
NSKW08	0.50"	1.0"	1.0"	2.00"	0.63"	1.63"	0.25"	0.88"	1.50"	0.188"	0.035
NSKW10	0.625"	1.0"	1.25"	2.5"	0.688"	1.78"	0.31"	1.0"	1.875"	0.218"	0.052
NSKW12	0.75"	1.25"	1.25"	2.5"	0.75"	2.13"	0.31"	1.25"	2.00"	0.218"	0.082
NSKW16	1.0"	1.50"	1.5315"	3.063"	1.0"	2.56"	0.38"	1.50"	2.5"	0.281"	0.145
NSKW20	1.25"	1.75"	1.875"	3.75"	1.13"	3"	0.44"	2.00"	3"	0.346"	0.254
NSKW24	1.50"	2.00"	2.1875"	4.375"	1.25"	3.5"	0.50"	2.25"	3.5"	0.346"	0.362
NSKW32	2.00"	2.5"	2.75"	5.5"	1.50"	4.5"	0.63"	3"	4.5"	0.406"	0.716

NSHF Horizontal shaft support

NSHF

HORIZONTAL SHAFT SUPPORT

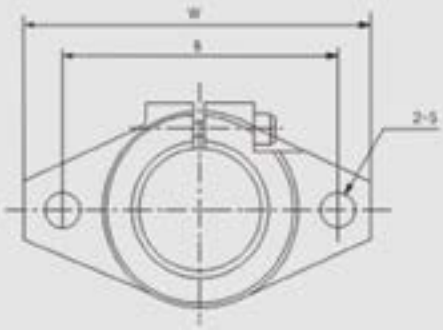

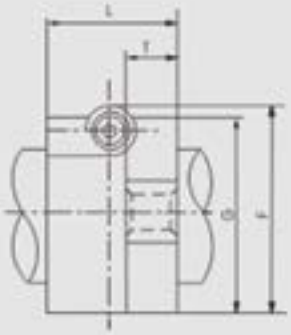

MODEL NO.	SHAFT DIAMETER	MAIN DIMENSIONS							DESIGNATION OF CLAMPING BOLT	DESIGNATION OF MOUNTING BOLT	WEIGHT (Kg)
		W	L	T	F	G	B	S			
NSHF3	3	43	10	5	24	20	32	5.5	M4	M5	0.013
NSHF4	4	43	10	5	24	20	32	5.5	M4	M5	0.013
NSHF5	5	43	10	5	24	20	32	5.5	M4	M5	0.013
NSHF6	6	43	10	5	24	20	32	5.5	M4	M5	0.013
NSHF8	8	43	10	5	24	20	32	5.5	M4	M5	0.013
NSHF10	10	43	10	5	24	20	32	5.5	M4	M5	0.013
NSHF12	12	47	13	7	28	25	36	5.5	M4	M5	0.020
NSHF13	13	47	13	7	28	25	36	5.5	M4	M5	0.020
NSHF16	16	50	16	8	31	28	40	5.5	M4	M5	0.027
NSHF20	20	60	20	8	37	34	48	7	M5	M6	0.040
NSHF25	25	70	25	10	42	40	56	7	M5	M6	0.060
NSHF30	30	80	30	12	50	46	64	9	M6	M8	0.110
NSHF35	35	92	35	14	58	50	72	12	M8	M10	0.380
NSHF40	40	102	40	16	67	56	80	12	M10	M10	0.510
NSHF50	50	122	50	19	83	70	96	14	M12	M12	0.890

LINEAR SHAFT AVAILABILITY

	Class L series (Carbon Steel - Case hardened)	Class SS Series (Stainless Steel)	CPL Series (Carbon Steel - Case hardened and Chrome Plated)
Material	Carbon steel (Ck55 or Cf53)	Stainless steel (440C equivalent or X46Cr13)	Carbon steel (Ck55 or Cf53)
Surface hardness	Hrc 59 - 65	Hrc 50 - 55	Hrc 50 - 55
Case hardened depth	0.016 to 0.059 inch (Depending on shaft OD)	0.016 to 0.059 inch (Depending on shaft OD)	Chrome Layer Thickness: 10+/-5 µm
Hard Chrome plated	-	-	Hrc 59 - 65
Shaft OD surface finish	8 Ra Max	8 Ra Max	8 Ra Max
Straightness	0.0024-0.0012 in/ per foot	0.0024-0.0012 in/ per foot	0.0024-0.0012 in/ per foot
Roundness	0.000157- 0.000276 max	0.000157- 0.000276 max	0.000157- 0.000276 max

Also available upon requested
- Cu-to-length per customer requirements
- Additional machining operations or custom designed shaftng can be manufactured per specific customer or application requirements

Class L Series - Carbon Steel

Nominal Diameter (in)	Basic Part Number	Diameter Tolerance per Class "L" (in)	Weight LB/FT	Max. Length (in)
1/4	L-1/4	0.2495/0.2490	0.17	236
3/8	L-3/8	0.3745/0.3740	0.38	236
1/2	L-1/2	0.4995/0.4990	0.66	236
5/8	L-5/8	0.6245/0.6240	1.04	236
3/4	L-3/4	0.7495/0.7490	1.50	236
1	L-1	0.9995/0.9990	2.66	236
1¼	L-1¼	1.12495/1.12490	4.17	236
1½	L-1½	1.4994/1.4989	6.0	236
2	L-2	1.9994/1.9987	10.67	236

SSL Series - Stainless Steel

Nominal Diameter (in)	Basic Part Number	Diameter Tolerance per Class "L" (in)	Weight LB/FT	Max. Length (in)
1/4	SSL-1/4	0.2495/0.2490	0.17	236
3/8	SSL-3/8	0.3745/0.3740	0.38	236
1/2	SSL-1/2	0.4995/0.4990	0.66	236
5/8	SSL-5/8	0.6245/0.6240	1.04	236
3/4	SSL-3/4	0.7495/0.7490	1.50	236
1	SSL-1	0.9995/0.9990	2.66	236
1¼	SSL-1¼	1.12495/1.12490	4.17	236
1½	SSL-1½	1.4994/1.4989	6.0	236
2	SSL-2	1.9994/1.9987	10.67	236

CPL Series - Carbon Steel - Chrome Plated

Nominal Diameter (in)	Basic Part Number	Diameter Tolerance per Class "L" (in)	Weight LB/FT	Max. Length (in)
1/4	CPL-1/4L	0.2495/0.2490	0.17	236
3/8	CPL-3/8	0.3745/0.3740	0.38	236
1/2	CPL-1/2	0.4995/0.4990	0.66	236
5/8	CPL-5/8L	0.6245/0.6240	1.04	236
3/4	CPL-3/4	0.7495/0.7490	1.50	236
1	CPL-1	0.9995/0.9990	2.66	236
1¼	CPL-1¼	1.12495/1.12490	4.17	236
1½	CPL-1½	1.4994/1.4989	6.0	236
2	CPL-2	1.9994/1.9987	10.67	236

M Series - Carbon Steel

Nominal Diameter (mm)	Basic Part Number	Diameter Tolerance per iso h6" (mm)	Weight Kg/m	Weight LB/FT	Max. Length (mm)
5	M-5	5.00/4.992	0.16	0.1076	3000
6	M-6	6.00/5.992	0.230	0.1546	6000
8	M-8	8.00/7.991	0.40	0.269	6000
10	M-10	10.00/9.991	0.62	0.417	6000
12	M-12	12.00/11.989	0.89	0.598	6000
14	M-14	14.00/13.89	1.21	0.813	6000
16	M-16	16.00/15.989	1.58	1.062	6000
20	M-20	20.00/19.987	2.47	1.660	6000
25	M-25	25.00/24.987	3.85	2.5882	6000
30	M-30	30.00/29.987	5.55	3.731	6000
40	M-40	40.00/39.984	9.87	6.6352	6000
50	M-50	50.00/49.984	15.40	10.3527	6000

Note: Also available in Stainless Steel (SS) and Chrome Plated (CP)

PRE-DRILLED & TAPPED

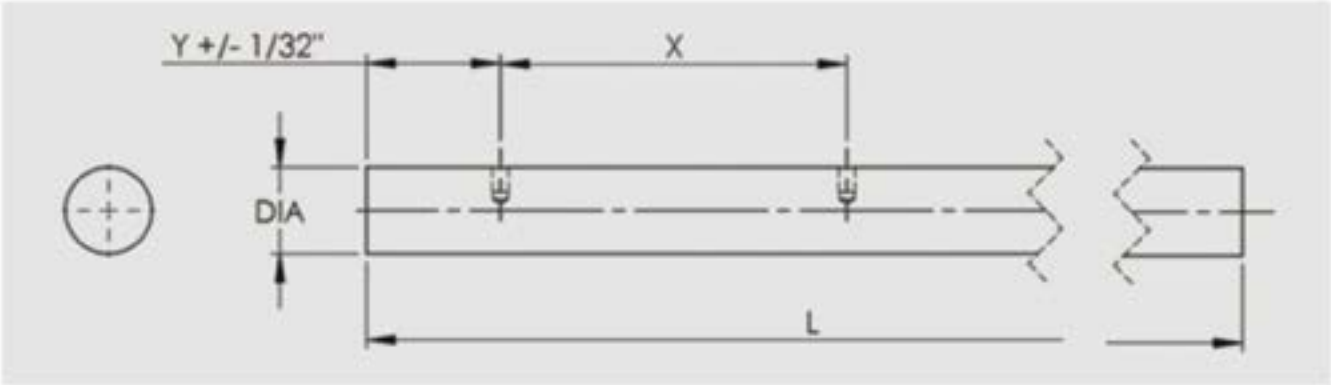

Please specify distance to first hole, "Y" dimension, with order

Nominal Diameter (in)	L, SS or CPL Predrilled		Hole Spacing	G Standard Thread Size	Length Tolerance (in)	Max Length (in)
	Part Number Predrilled	LPD Tolerance Class	X (inch +/ - 1/ 64) (non-cumulative)			
1/2"	1/2 PDL	0. 4995 0. 4990	4	#6-32	+/- 1/32	166
5/8"	5/8 PDL	0. 6245 0. 6240	4	#8-32	+/- 1/32	178
3/4"	3/4 PDL	0. 7495 0. 7490	6	#10-32	+/- 1/32	178
1"	1 PDL	0. 9995 0. 9990	6	1/4-20	+/- 1/32	178
11/4"	11/4 PDL	1. 2495 1. 2490	6	5/16-18	+/- 1/32	178
11/2"	11/2 PDL	1. 4994 1. 4989	8	3/8-16	+/- 1/32	178
2"	2P DL	1. 9994 1. 9987	8	1/2-13	+/- 1/16	178

NSP Pipe shaft

NSP
PIPE SHAFT

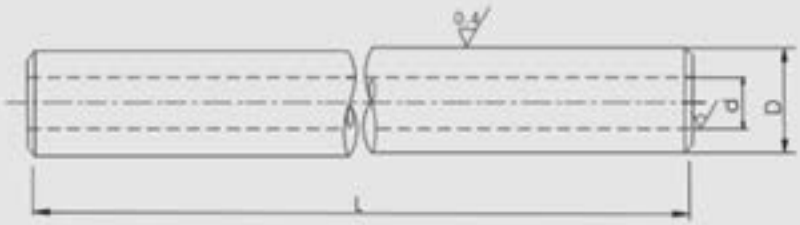

MODEL NO.	OUTER DIAMETER	DIMETER TOLERANCE		DEPTH OF EFFECTIVE HARDEND LAYER	WEIGHT(Kg/m)
		g6	h6		
NSP16	16	-0.006 -0.017	0 -0.011	0.6~1.2	1.23
NSP20	20	-0.007 -0.020	0 -0.013		1.26
NSP25	25				1.68
NSP30	30			0.8~2.0	3.97
NSP35	35	-0.009 -0.025	0 -0.016		5.44
NSP40	40				5.37
NSP50	50				7.42

Material: GCr15(SUJ2), rigidity: more than HRC60
(ID have several size. Please affirm first)

NSBR Support rail unit

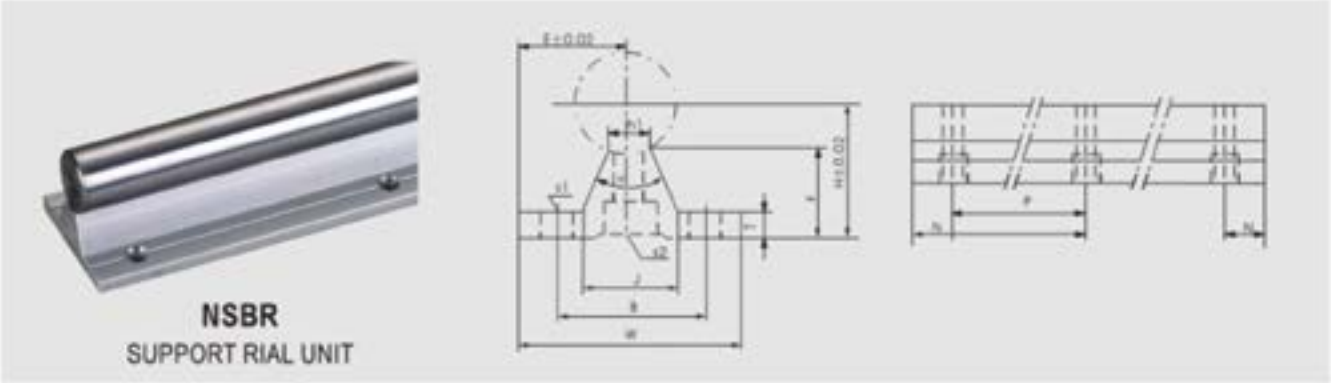

MODEL NO.	SHAFT DIAMETER	MAIN DIMENSIONS								MOUNTING DIMENSION					WEIGHT (Kg)
		H	E	W	F	T	J	h1	θ	B	N	P	S1	S2	
NSBR10	10	18	16	32	13.5	4	12.4	4.7	80°	22	50	100	4.5	M4	1.2
NSBR12	12	20.46	17	34	15	4.5	15	6	80°	25	50	100	4.5	M4	1.8
NSBR13	13	21	17	34	15	4.5	15	6	80°	25	50	100	4.5	M4	2.1
NSBR16	16	25	20	40	17.8	5	18.5	8	80°	30	50	150	5.5	M5	2.4
NSBR20	20	27	22.5	45	17.7	5	19	8	50°	30	50	150	5.5	M6	3.3
NSBR25	25	33	27.5	55	21	6	21.5	8	50°	35	100	200	6.5	M6	5.31
NSBR30	30	37	30	60	22.8	7	26.5	10.3	50°	40		200	6.5	M8	7.83
NSBR35	35	43	32.5	65	26.5	8	28	13	50°	45		200	9	M8	9.88
NSBR40	40	48	37.5	75	29.4	9	38	15.5	50°	55		300	9	M8	13.15
NSBR50	50	62	47.5	95	38.8	11	45	20	50°	70		300	11	M10	20.4

Annotate: 1. length can random
2. Mounting hole center distance can make by buyer in denomination of 25mm

NSTBR/NSBR–B Support rail unit

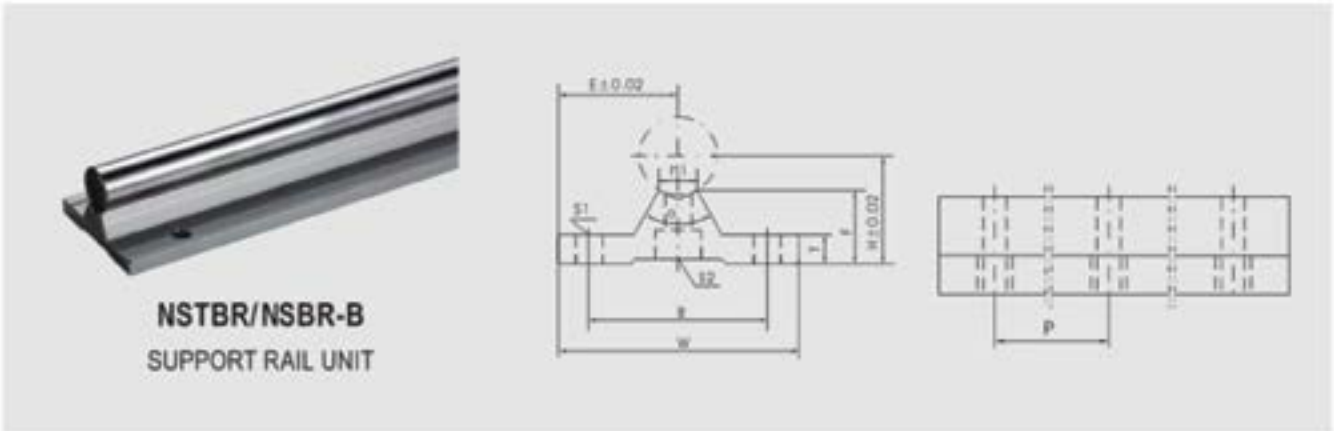

MODEL NO.	SHAFT DIAMETER	MAIN DIMENSIONS							MOUNTING DIMENSION				WEIGHT (Kg)
		H	E	W	F	T	h1	θ	B	P	S1	S2	
NSTBR16	16	22.14	25	50	15	6	8	60°	37	150	5.5	M5	2.5
NSTBR20	20	29.01	27.5	55	19.7	8	8	60°	40	150	5.5	M6	3.5
NSTBR25	25	32	32.5	65	20	10	8	60°	45	200	6.5	M6	5.5
NSTBR30	30	36.52	37.5	75	22.3	12	10.3	50°	55	200	6.5	M8	8
NSBR16B	16	25	20	40	17.4	5	7.4	50°	30	150	5.5	M5	2.4
NSBR20B	20	27	22.5	45	17.4	5	8	50°	30	150	5.5	M6	3.3
NSBR25B	25	33	27.5	55	21	6	10	50°	35	200	6.5	M6	5.31
NSBR30B	30	37	30	60	22.5	7	8	60°	40	200	6.5	M8	7.83

Annotate: 1. length can random
2. Mounting hole center distance can make by buyer in denomination of 25mm

SHAFT SUPPORT ASSEMBLIES

PREDRILLED SHAFT SUPPORT ASSEMBLIES AND RAILS

SHAFT DIA	SHAFT SUPPORT ASSEMBLY	PREDRILLED SHAFTSUPPORT RAIL	H+/-.001	W	h1	T	B+/-.005
1/2	NSRA-8	NSR-8-PD	1.125	1-1/2	1/4	3/16	1.000
5/8	NSRA-10	NSR-10-PD	1.125	1-5/8	5/16	1/4	1.125
3/4	NSRA-12	NSR-12-PD	1.500	1-3/4	3/8	1/4	1.250
1	NSRA-16	NSR-16-PD	1.750	2-1/8	1/2	1/4	1.500
1-1/4	NSRA-20	NSR-20-PD	2.125	2-1/2	9/16	5/16	1.875
1-1/2	NSRA-24	NSR-24-PD	2.500	3	11/16	3/8	2.250
2	NSRA-32	NSR-32-PD	3.250	3-3/4	7/8	1/2	2.750

NSRA Inch Support Rail Unit

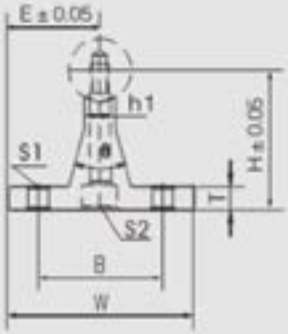

SHAFT DIA	S1	S1	S2	S2	E+/-.001	X	Y	WEIGHT FT/LBS
	BOLT	HOLE	SCREW	HOLE				
1/2	6	.169	6-32x7/8	.169	.750	4	2	.6
5/8	8	.193	8-32x7/8	.193	.812	4	2	.8
3/4	10	.221	10-32x11/4	.221	.875	6	3	1.0
1	1/4	.281	1/4-20x11/2	.281	1.062	6	3	1.4
1-1/4	5/16	.343	5/16-18x13/4	.343	1.250	6	3	2.1
1-1/2	5/16	.343	3/8-16x2	.406	1.500	8	4**	2.6
2	3/8	.406	1/2-13x21/2	.531	.531	8	4**	4.2

NOTES:

* (**)NSR-24-PD-36" AND NSR-32-PD-36"(Y=2")
* MANUFACTURED FROM EXTRUDED 6061-T6 ALUMINUM FOR ENGINEERED PERFORMANCE

Profile Rail

COMMON RAIL DESIGN

One Rail Geometry for All Blocks

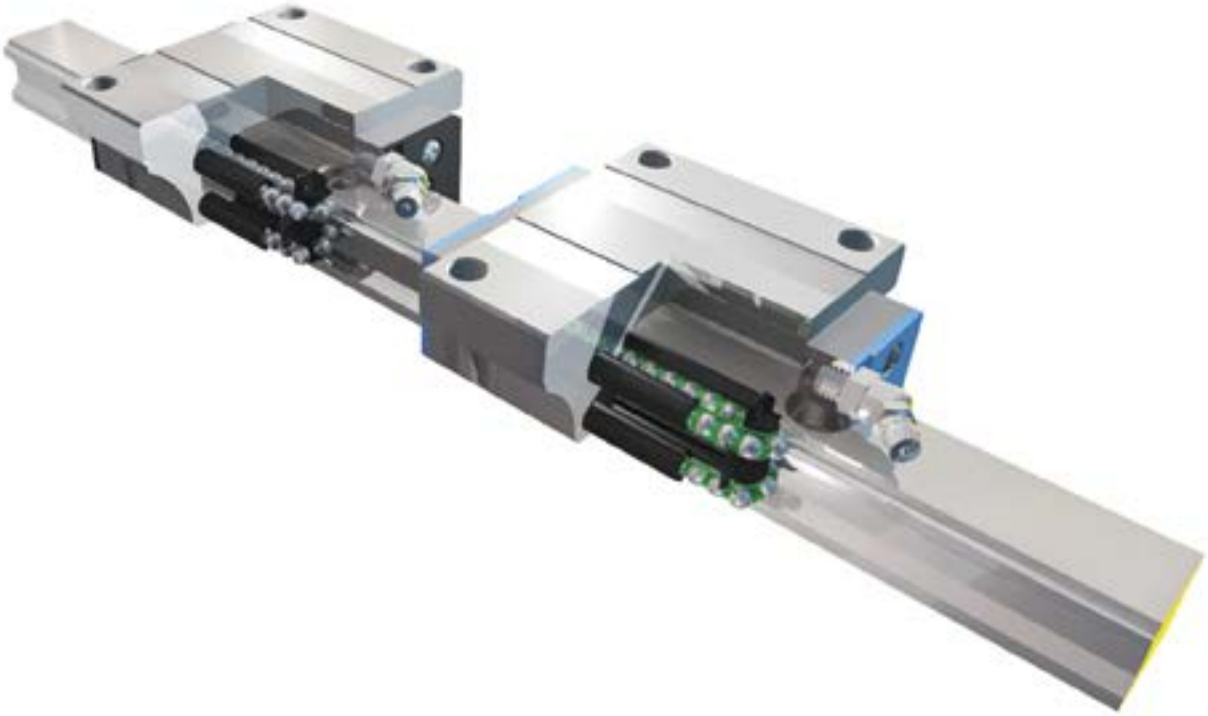

The modular structure of our linear guides allows for one type of rail to be used for caged and non-caged carriages, significantly lowering inventory costs.

Linear Actuators

ROD-STYLE

Types of Motors

Stepper Motor

Servo Motor

AC Motor

DC Motor

RODLESS STYLE

Drive Types

Acme Screw

Ball Screw

Rack & Pinion

Linear Motor

Linear Products

Standard Ball Bushing

Self-Aligning Ball Bushing

Self-Aligning Pillow Blocks

Ball Screws

Ball Screw Support Bearings

Shafting

NTN AUTOMATION

Linear Ball Bushings and Shafting

NTN BEARING CORPORATION OF CANADA
305 Courtneypark Drive W, Mississauga, ON, L5W 1Y4, CANADA
Tel: 905-564-2700 Fax: 905-564-7749
www.ntn.ca